ELEMID

SYSTEM

USER'S MANUAL

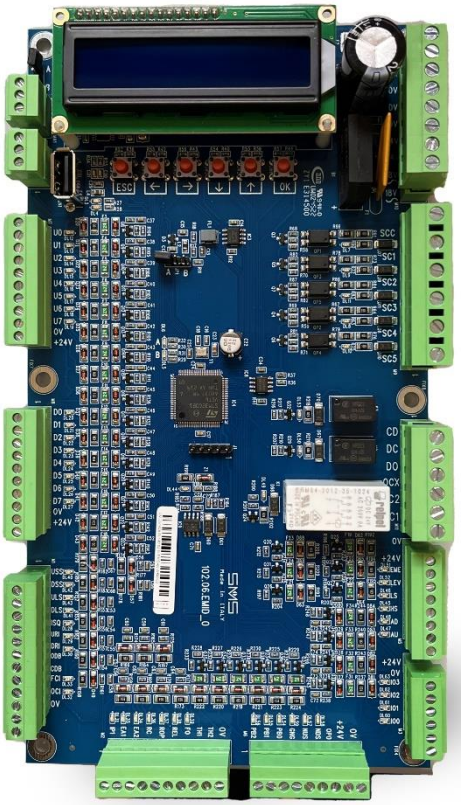

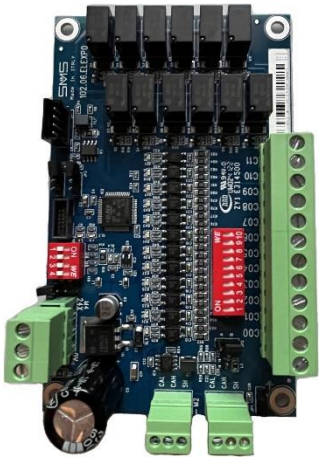

00	>=V01.00	21/11/2023	E. Castagnini
REV.	SOFTWARE	DATE	T.M. Checked and Approved

1 - TABLE OF CONTENTS

PAGE INTENTIONALLY LEFT BLANK

2 - INTRODUCTION

ELEMID is a control board system for lift operation, designed and produced by SMS.

ELEMID system is based on three different boards:

- ELEMID
- ELECB
- ELEXP

The boards are connected each other with CAN Bus, and there are many possible configurations of ELEMID, depending on how many stops are needed in the installation and the door configuration. At the moment, the maximum number of stops supported is **32**.

ELEMID is the main board, which controls every aspect of lift behaviour, and is equipped with display and button interface to edit parameters and settings. This board is located on the Control Panel.

The connection between Car and Control Panel can be achieved in two different ways:

- **Parallel connection**
- **Serial connection**

In **Parallel Connection**, ELEMID manages automatic doors controls, car calls and sensors, so all these signals are wired in the travelling cable. This is the simplest connection, but the number of wires in the travelling cable can be too many, especially for installations with many stops. Installations with reduced stops number can be implemented using **only ELEMID board without expansion boards**. (See **4.1 - Parallel Car Connection**)

ELEMID System supports **Serial Connection** between the Control Panel and the Car. To implement serial connection ELECB board is mandatory: this board manages all the Car signals and the connection between Car and Control Panel consist in only CAN Bus and Power wires. (See **4.2 - Serial Car Connection**)

ELECB Board also supports double side automatic doors control and Selective Opening.

Parallel Connection (ELEMID Board)		
Mode	**ELEXP**	**Max stops**
Homelift		8
APB		12
Down Collective		12
	1	18
	2	24
	3	30
	4	32
Full Collective		8
	1	12
	2	16
	3	20
	4	24
	5	28
	6	32

Serial Connection (ELEMID + ELECB Board)		
Mode	**ELEXP**	**Max stops**
APB		12
Down Collective		12
	1	24
	3	32
Full Collective		12
	2	18
	3	24
	6	32

Another feature of ELEMID system is **Multiplex** operation, that is supported in either Serial or Parallel connection.

In multiplex operation two or more lifts are coupled to optimize the traffic, and **no additional expansion boards** are required. At the moment ELEMID supports **Duplex**, **Triplex** and **Quadruplex** operation.

3 - GENERAL CHARACTERISTICS

3.1 - ELEMID System General Specifications

Application Software installed on the micro controller, can be upgraded via PC and USB cable.

System configuration and faults diagnostic with on board LCD display interface (16 characters on 2 rows) and 6 buttons keyboard.

The parameters are stored permanently in E^2PROM memory, even in absence of the supply voltage.

Operating temperature: 0°C ÷ 50°C

The ELEMID system manages the following types of installation:

► **Drives**

- Traction Lift
  - AC 1 speed
  - AC 2 speeds
  - VVVF (OPEN/CLOSED loop)
- Hydraulic Lift
  - Direct Starting
  - Soft Starter Starting (with optional Soft Stop)
  - Star-Delta Starting
  - HYDROVERT

► **Door Types**

- Manual
- Semiautomatic (automatic car door and manual landing doors)
- Automatic
- Open or Closed Door Parking
- 1 Entrance or 2 Entrances with Serial car connection.

► **Operations**

- Automatic Reset at Top or Bottom Floor at Start Up
- Inspection
- Manual Control (for testing and adjustments)
- Releveling
- Automatic Return at Selected Floor
- Emergency
- VIP call
- Fire-Fighters operation EN81-72 or EN81-73

► **Car Positioning System**

- Monostable or Bistable Magnetic Switches

► **CONTROLS AND PROTECTIONS**

- Motor Thermal Protection via Thermistors
- Maximum Travel Time Alarm (separate for High Speed and Low Speed)

► **Standards and Directives**

- Lifts Directive 2014/33/UE
- Harmonized Standards EN81-20, EN81-50, EN81-1, EN81-2
- EMC Directive 2014/30/UE
- Harmonized Standards EN12015 EN12016

3.2 - Description of the Main Operation Phases

ELEMID manages lift operation in different conditions that can occur during service:

- **Automatic Service**
- **Reset Operation**
- **Inspection Operation**
- **Manual Control Service**
- **Releveling**
- **Automatic Return to Floor**
- **Emergency Operation**
- **VIP Call Operation**
- **Fire-Fighter Operation EN81-72 / EN81-73**
- **Home Lift Operation**

3.2.1 - Automatic Service

This is the regular service of the system.

It completely manages the operating logic of the lift, which can be: Automatic Push Button (APB), Down Collective, Full Collective or Home Lift.

At starting, the board checks, via the **RC** input, that none of the contactors involved in car travel is stuck.

The starting sequence is then initiated by activating the closing of any automatic doors. Door closing is allowed only if all reopening devices (photocell, safety edge, door opening button) are not activated.

The board is informed when doors are closed by the closing of the car door contact (safety chain input **SC4**); there is no input for the door closing limit switch, which must be connected, if present, in series with the closing contactor coil.

When doors are closed, with a small adjustable delay to allow the complete mechanical closing (see function **F52**), the CAM output is enabled to activate any retiring cam; subsequently, after the landing door locked contact closing (safety chain input **SC5**), the actual starting is commanded and, except for special cases, it always is in high speed, with the activation of the outputs Up **AU** or Down **AD**, and High Speed **HS** at the same time.

The lift slows down by activating the Low Speed output **LS** and de-activating High Speed output **HS**.

The stop at floor takes place by opening **LS**. The opening of **AU**/**AD** may be simultaneous with **LS** (for 2-speeds or hydraulic systems), or it can be appropriately delayed for systems with VVVF drive.

The delay can be programmed through an internal timer **F17**, or as an alternative, if VVVF has an output to control contactors, this can be used by connecting it to **TDC** input (to be programmed on one among IO0 – IO3 programmable Inputs/Outputs, see **5.6 - Programmable Inputs / Outputs**) (**ON** during the travel and turns **OFF** at floor stop after a delay). When motor contactors are switched off, if the car is in the door zone, so if at least one of the two switches **USS** and **DSS** is engaged, automatic doors opening is executed.

3.2.2 - Reset Operation

The reset operation is carried out automatically by bringing the car to an end floor every time the supply voltage is restored or when returning to normal operation, after inspection operation or after some alarm has tripped (such as the maximum travel time or motor protection with thermistors, etc.).

During reset, the position of the car is not defined, therefore at this stage on display appears the message :

Floor: --

Reset is carried out in different ways, depending on the position of the car and the drive type:

- **Car outside the bottom floor slowdown area**:

  it starts in down direction at high speed and stops when the switch **DLS** opens (1 speed lift) or slows down when **DLS** opens and stops with the opening of **USS** and **DSS** (for all the other types of drives).

- **Car in the bottom floor slowdown area but not at floor level**:

  – 1 or 2 speed lift systems: it starts moving up at high speed and stops when switch **ULS** opens (1-speed lift) or slows down when **ULS** opens and stops when **USS** and **DSS** switches are engaged (2 speed lift).

  – Hydraulic system or with VVVF drive: it starts moving down at low speed and stops at bottom floor when **USS** and **DSS** switches are engaged.

When the car stops at the end floor and opens the doors, the car position is reset.

Even during Automatic Service, every time the car reaches an end floor, it is always forced to slow down and the current car position is updated.

3.2.3 - Inspection Operation

During the inspection operation, the maintenance worker on car roof controls its movement in hold to run mode (with permanent pressure of the push-buttons).

The board detects the status of the inspection switch via the input **ISQ** (ELEMID) or **ISC** (ELECB) (**ISQ** / **ISC** = **OFF** → **inspection service active**) and controls the movement direction when the relative inspection push-buttons are activated.

Inspection run can be programmed at high or low speed, if the high speed is set and the motor drive is by VVVF, it is always commanded a medium speed level (HS+LS) anyway.

In inspection mode the elevator stops on ULS, DLS limit switches if parameter F61 = YES.

Disabling Inspection Operation, the system returns in Automatic Service after a Reset Operation.

3.2.4 - Manual Control Service

In the manual control service, the maintenance worker can control the movement of the car from the control panel, while normal calls and the opening of the doors are disabled.

The service is activated through the keys on the board, by selecting on the display the menu 2) MANUAL MODE, with the car stopped at floor level.

If the safety chain is closed, the keys ↑ and ↓ control (up and down respectively) car starting, which moves at High Speed as long as the button is pressed.

When the button is released, the car keeps on moving at high speed until it reaches the first slowdown zone, where slows down and stops at the corresponding floor.

If the button opposite to the direction of travel of the car is pressed (e.g. key ↓ with car moving up), the lift stops immediately.

To return to automatic operation, you must press the **ESC** key.

3.2.5 - Releveling

It is the operation that allows the car to return within the stop zone, both in up and down direction.

Provide a Safety Circuit (CS) in the Control Panel that bypasses the Safety Chain Door Contacts when the car is located within the door zone, and enables the releveling operation with the doors open by activating **REL** input. The board enables the releveling if the car has stopped for at least 3 seconds, it is positioned between the door zone, and the **REL** input is active.

In this condition, if the car moves below **USS**, keeping **DSS** engaged, the **AU** (Run Up) command is activated whereas if the car rises above **DSS**, keeping **USS** engaged, the **AD** (Run Down) command is activated.

The movement is controlled at Low Speed if the drive is **F04: 2 SPEEDS**, **HYDRAULIC** or **VVVF**.

For more information on how to connect the Safety Circuit with ELEMID board see **5.5.1 - Positioning and Releveling** .

Releveling operation is disabled in Inspection and Emergency operation and also when the safety input **SC3** is open, but it remains active during out of service because of the memorized opening of the overtravel switch (safety chain input **SC2**), on the condition that the overtravel switch has closed in the meantime.

3.2.6 - Automatic Return to Floor

The car return to a floor is controlled when the car has no command active, after a programmable time **F28** (maximum 15 minutes); such control is different for Traction lifts (**1 speed**, **2 speed** or **VVVF**), or Hydraulic.

For Traction systems, automatic return is executed only if enabled by **F13**, at the floor programmed by **F14**.

For Hydraulic systems, **car return is always executed** and the return floor is the **bottom floor**.

The automatic return is only activated during normal function; when the car stops at the programmed return floor, the doors do not open.

3.2.7 - Emergency Operation

Emergency operation brings the car at floor when the mains voltage turns off; the operation is activated when the emergency input **ROP** closes, and Function **F36 - Emergency Floor** defines the operation mode (See **8.3 - Functions**)

a) **F36 = Next Floor** – Recommended setting for **traction lifts**
5 seconds after activating **ROP**, the board commands the car to go down at low speed.
The car stops at the first stop zone (i.e. when USS and DSS are both engaged), the automatic doors open and when fully open no other operation are executed.

b) **F36 = Bottom floor** – Recommended setting for **hydraulic lifts**
5 seconds after activating **ROP**, the car goes down at high speed to the bottom floor. On arriving at the down limit switch **DLS** it slows and stops at the floor, the automatic doors open and any further operation is prevented.

In both cases, when the **ROP** input returns to **OFF**, the system performs a Reset Operation and returns to service.

Output **EME** is turned **ON** during all the emergency operation; for automatic or semiautomatic doors, after reaching the destination floor and opening the doors, this output switches **OFF**. (**5.6 - Programmable Inputs / Outputs**)

3.2.8 - VIP Call Operation

The VIP call floor is provided with a key switch (VIC input – to be programmed on one among IO0 – IO3 Programmable Inputs/Outputs, see **5.6 - Programmable Inputs / Outputs**).

When the key is inserted **VIC** = **ON**, all commands and the existing calls are cancelled, and it is no longer possible to enable other commands.

The car reaches as fast as possible the programmable VIP call floor **F15**:

a) if the car is stopped, it immediately moves to the VIP call floor.

b) if the car is moving in the same direction as that required by VIP call, it keeps on moving until reaching the VIP call floor.

c) if the car is running in the opposite direction to that requested by VIP call, it slows down and stops at the first floor reached, without opening the doors and, after 2 seconds, it starts moving in the direction of the VIP call.

When the car reaches the floor, if the VIC input stays ON, only car calls can be used and one at a time: in this way, the preferential user can reach the desired floors without the lift being called by another person.

During this operation, the lift parks with doors open.

The normal operation of the lift is restored when the key is removed and the VIC input turns OFF.

3.2.9 - Fire-Fighter Operation EN81-72 / EN81-73

ELEMID supports Fire-fighter Operation in two operation modes, selectable through **F44** parameter:

- **EN81-73**, **Behaviour of lifts in the event of fire** (applies to all lift systems)
- **EN81-72**, **Fire fighters lifts** (special lifts designed for Fire fighters rescue)

If **None** is selected, fire-fighter operation inputs are ignored.

Both operations provide a first phase, indicated in the Standards as **Phase 1**, in which the system brings the car to a programmable floor and opens the doors.

In particular:

a) if the car is still, it immediately leaves towards the fire-fighter floor.

b) if the car is running in the programmed fire-fighter floor direction, it continues the run until it reaches the destination.

c) if the car is running in the opposite direction, it slows down and stops at the first floor it encounters, and without opening the doors it starts again for the fire-fighter floor.

If the lift is built-up in compliance to EN81-72 Standards, there is a second phase, called **Phase 2**, in which the fire-fighters may move the car under their own exclusive control.

For more detailed information, please refer to the Standards.

For Fire-Fighter Operation management the following inputs are involved:

► On ELEMID Board

FO - Fire-Fighter Operation Activation Contact

It can be a key switch at the fire-fighter floor, or the contact of an automatic fire detection system. Input status must be **ON with firefighter operation Not Active** (Normally Closed contact). When the input turns **OFF**, the fire-fighter operation is activated, bringing the car at the floor defined by Function **F45 Fire-Fighters Floor 1**.

EKF - Key Switch External To The Car

To be programmed on one among IO0 – IO3 Programmable Inputs/Outputs, see **5.6 - Programmable Inputs / Outputs**.
Activates Phase 2 of fire-fighter operation, type EN81-72, to allow firefighters to move the car towards a designated floor.
As defined in point 5.8.8 g) of the Standards, if the key is removed when the car is at a different floor than the designated one, it closes the doors and goes to the designated floor.
Input status must be **OFF with Phase 2 Not Active** (Normally Open contact).

VIC - Additional External Control

Brings the car to the designated fire-fighter floor, with lift compliant to EN81-72, after the designated floor has first been reached, then left for an operation controlled by a fire-fighter in the car.
This option is described at point 5.8.2 of the Standards.
Input status must be **OFF** with **Non Active** operation (Normally Open contact).

► On ELECB Board

IKF - Key Switch In The Car

Activates Phase 2 of fire-fighter operation type EN81-72, to allow firefighters to move the car towards a designated floor.
As defined in points 5.8.8 g - and h) of the Standards, it has priority compared to the external switch, and if the key is removed when the car is at a different floor than the designated one, it closes the doors and remains still.
Input status must be **OFF** with Phase 2 **Not Active** (Normally Open contact).

IPA - Key Switch At Floor

Used as request for Fire-Fighter Operation, with arrival of the car at the floor defined by Function **F46** Fire-Fighter Floor 2.
Input status must be **OFF to activate firefighter operation** (Normally Closed contact).

Moreover:

ODB - The Door Opening Push Button

Operates in Phase 1 and in Phase 2 of the EN81-72 operation for opening of the car doors, as indicated in points 5.8.7 b - and 5.8.8 e) of the Standards.
Also it can be activated at the end of Phase 1 of the EN81-73 operation as door opening push button, in the countries where car parking with doors open is not permitted, as indicated in point 5.3.5 of the Standards. Programming **F47 Door Closing Phase 1** to **Yes**, after 20 seconds from arrival of the car to the designated floor, the doors close automatically and can be re-opened by pressing the ODB push button. If the operation is type EN81-72 or if the **F47** value is set on **No**, this function is not active and at the end of Phase 1 the doors remain open.

Input status must be **ON** in case of **Non Activated** push button, as for the normal operation (Normally Closed contact).

In case of return of the activation inputs to normal conditions, the system can return to normal operation only if it has been brought back to the firefighter floor from which the operation started (Point 5.8.8 m of the Standards).

► F45 – F46

Function **F45** is the designated Fire-Fighters floor n. 1, activated by the **FO** input, prior compared to **IPA**, which is instead relative to the **F46** function, designated fire-fighters floor n. 2.
The programmable value in **F45** and **F46** goes from 0 to the top floor, but 0 defines the "not leaving" of the car during Phase 1, meaning the opening of the doors directly at the floor in which the lift is stopped.
This means that if you want to bring the lift to floor 0, actually you need to set for example **F45** = 1.
More generally, when the lift needs to be brought to a specific floor, set this value at the floor number plus 1.

3.2.10 - Home Lift Operation

This operation is for managing commands on the load support and landing calls according to EN81-41 regulations.

The buttons located on the platform, which are used to control the movement from the platform, are depending upon “hold to run”.

The landing call buttons, which are used to control the movement from the floors, are not “hold to run”, the call is memorized like APB Operation.

Calls cannot be registered from floors if the platform is not at a defined floor.

3.3 - Diagnostic and Programming

On the ELEMID board is installed **an LCD DISPLAY** (16 characters on 2 rows) and **6 KEYS** (**ESC, ←,→,↓,↑, OK**).

During the operation, the display shows a **Status Page**, which shows the operating status of the system.

In the status page is always displayed:

- The **floor** where the car is:
  The displayed floor number depends on the main floor setting (**F02**): this is normally displayed as `00`, the upper floors from `01` up, while the lower floors as `-1`, `-2`, etc.
  It shows `--` during reset.
  By setting **F54** it is possible to change the main floor appearance (See **8.3 - Functions**).
- The **state** of the lift, for example:
  - Normal Operation `AUTO`
  - Manual Service Control `MAN`
  - Reset `RES`
  - Inspection `INS`
  - Emergency `EME`
- The **sub-state**, the current operation:
  - Direction and Speed Level `HS`, `LS`, `Up`, `Down`
  - Door Status `Door Open`, `Opening`, `Closed`, `Closing`
  - Other information `Relevelling`

► **Examples of status pages**

On

```
ELEMID  V00.00
 by SMS s.r.l.
```

Reset

```
Floor:--     RES.
  Run Down HS
```

Doors closing

```
Floor:08    AUTO
  Door closing
```

Direction and Speed Level

```
Floor:03    AUTO
  Run Down HS
```

Doors open

```
Floor:08    AUTO
  Door OPEN
```

Inspection

```
Floor:--     INS.
  Run Up MS
```

► **Key Functions**

KEY	FUNCTION
OK	Enters the Programming / Diagnostics mode Saves the value of the newly modified function
↑	Go to the next function Increase the value of the selected function
↓	Go to the previous function Decrease the value of the selected function.
←	Undo when editing a value, Move the cursor to the left in edit mode
→	Start changing a function Move the cursor to the right in edit mode
ESC	Exit the Programming / Diagnostics mode

Press the **OK** button with the lift stopped to enter the **Selection Menu**, if they are no active priority operations such as inspection, emergency, out of service.

► **Selection Menu**

This menu allows the selection of various sub-menus.

Menu, options 1 and 2

```
1>DIAGNOSTICS
2>MANUAL MODE
```

Menu, options 3 and 4

```
3>COUNTERS
4>ACCESS
```

Menu, options 5 and 6

```
5>FUNCTIONS
6>SETTINGS
```

Menu, option 7

```
7>TEST
```

Use the keys ↓ and ↑ to navigate the menu, and **OK** button to choose the desired option according to the blinking cursor.

To access all submenu (except Diagnostics) it is necessary to enter an 8 digit **Access Code**.

```
A01:AccessCode 1
     00000000
```

SMS supplies the ELEMID boards programmed with **Access Code = 00000000**. The user can choose to modify it as needed after the first access (See **3.3.5 - Access**).

To enter the code, use keys ←,→,↓,↑ as described in the preceding Table **Key Functions**.

By pressing **OK**, if the code is correct it enters the selected menu; instead the display continues blinking and it is possible to return in normal operation by pressing **ESC**.

After entering a correct Access Code, access is granted for 30 minutes without re-entering it, even if you exit or change the menu.

3.3.2 - Diagnostics

By accessing this menu, the total number of stored alarms is shown on the display:

```
Total   Alarms
        3
```

If there are one or more alarms, press **OK** to display the numeric code of the first alarm E--, followed by a brief description.

```
E16: Ext.  Trip 1
```

By pressing key ➔ it is possible to see the number of registration and the total number of alarms.

```
E16: 01/03
```

Alarms are displayed in the order in which they took place, starting from the most recent, with a maximum of 32 events: the 33rd alarm onwards deletes the oldest occurrence.

Press ↑ to skip to the next alarm. If there is no other alarm, the first alarm will be displayed.

To clear all the alarms press the keys ← and ➔ simultaneously.

To exit the Diagnostics menu, press **ESC**.

If an alarm occurs, causing the lift to go **Out of Service**, the display automatically shows the **alarm code**, that **flashes** until normal operation is restored:

```
E15:  Thermistors
 <OK> To View
```

Press **OK** on this page and then both keys ← and ➔ to clear the alarms and restore the operation of the lift system.

As indicated above the ← and ➔ buttons delete all the alarms present, so it is recommended to check them all before returning the lift to service following an out of order alarm.

All possible Alarm Codes are reported in **8.2 - Alarm Codes.**

3.3.3 - Manual Mode

Provides access to the Manual Control Service, see **3.2.4 - Manual Control Service**.

3.3.4 - Counters

In this menu, counters status is displayed, providing information on the lift system operation.

C01	Number of up travels
C02	Number of down travels
C03	Number of door openings
C04	Number of door closings
C05	Number of relevellings up
C06	Number of relevellings down

```
C02: Down travels
        600
```

By selecting for example C02, you will display the number of down travels carried out by the lift:

The number is incremented every 100 travels and for this reason the value displayed is always a multiple of 100. To reset the count, press both buttons ← and ➔ simultaneously.

3.3.5 - Access

In this menu, you can customize the **Access Code** (after entering the currently valid code) and change the language (**Italian , English, Spanish** and **French**).

SMS supplies the ELEMID boards programmed with **Access Code = 00000000**.

Be careful to keep the access code, if you change the default factory setting.

```
A01: AccessCode 1
     00000000
```

Use the keys ←,→,↓,↑ to change the code, as described in the Table **Key Functions** and confirm with **OK**.

To change the language, from the previous screen press ↓.

```
A02: LanguageSel.
     English
```

Now press the →, then ↓ to select the desired language and confirm with **OK.**

3.3.6 - Functions

This menu allows ELEMID system configuration, that is for example to insert the specific installation data, choose among the different operation modes, and edit specific timing.

All the Functions, with the available settings and the default values are listed in **8.3 - Functions**.

```
F01: Top floor
        11
```

Example **F01: Top Floor**

Set the highest floor number, in this case 11.

Press ↓ and ↑ to select between the different functions.

Press → to edit the current function value, that will start to flash on the bottom line of the display.

Press ↓ or ↑ to increase or decrease the value of the function.

Press ← or → to move the cursor to the next or previous digit, if it is a numeric type function.

Press **OK** to save the value or press ← to undo the change; the value will stop blinking.

3.3.7 - Settings

This menu allows to set programmable inputs/outputs:

```
S01: I/O IO0
 OS-On Service
```

Use the keys ←,→,↓,↑ to change the code, as described in the Table **Key Functions**, press **OK** to save changes.

It is possible to set:

Setting	Description	Location	Default
S00	**LCD** Contrast	LCD	*
S01	**IO0** setting	M7, terminal 1	DOL
S02	**IO1** setting	M7, terminal 2	CAM
S03	**IO2** setting	M7, terminal 3	LC
S04	**IO3** setting	M7, terminal 4	OS
S05	**LEV** setting	M8, terminal 5	LEV
S06	**EME** setting	M8, terminal 6	ALF
S07	Output contact **OC1-OC2-OCX** setting	M9, terminals 1, 2 and 3	EC
S08	Input open door button N.O.	M4, terminal 8 (ODB) for parallel car connection ELECB M3, terminal 7 (ODB) for serial car connection	N.C.
S09	Input photocell N.O.	M5, terminal 1 (IP1) for parallel car connection ELECB M4, terminal 1 (PE1) and 2 (PE2) for serial car connection	N.C.

For ELEMID Programmable Inputs/Outputs by setting **S01-S09** (See **5.6 - Programmable Inputs / Outputs**). * Factory setting.

4 - BOARD CONFIGURATIONS

4.1 - Parallel Car Connection

In this configuration, all boards are located in the Control Panel.

ELEMID board manages all car signals, that have to be wired from Control Panel to the Car via travelling cables.

ELEMID alone without ELEXP boards (set **F51** to **No**) can be used for **maximum 12 floors** installations, depending on the operation mode.

Parallel Connection (ELEMID Board)		
Mode	**ELEXP**	**Max stops**
Homelift		5
APB		8
Down Collective		8
	1	14
	2	20
	3	26
	4	32
Full Collective		6
	1	10
	2	14
	3	18
	4	22
	5	26
	6	30
	7	32

Table 1

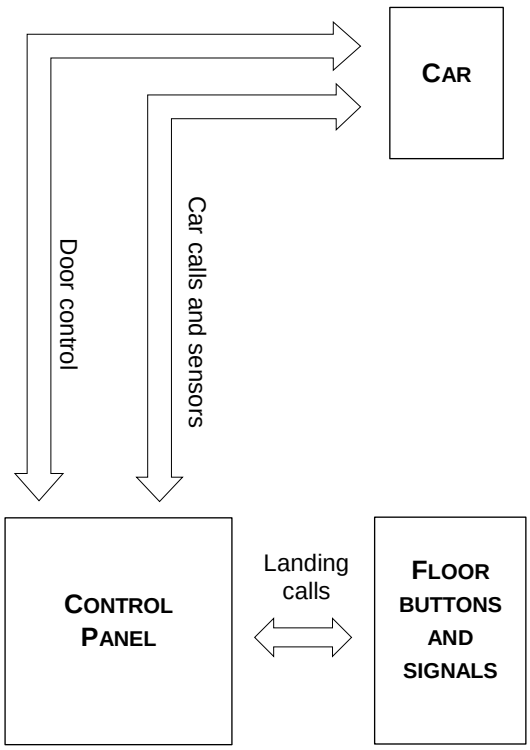

The user can add ELEXP boards to expand ELEMID I/O to support installation with higher stop number, as shown on the table, up to **32 floors** (set **F51** to **Calls only**).

The boards are connected **via CAN Bus**, and every ELEXP board should be programmed with the correct address by operating the **SW2** dipswitch: see **8.6.2 - Board Address** for more information.

In the next pages there are some tables that shows how to connect **Landing Calls** and **Car Calls** for every combination of ELEMID, ELECB and ELEXP, depending on Operation Mode **F03** and Top Floor **F01**.

Each Car or Landing Call terminal is both a board input for a pushbutton and output for a signal, that assumes two different meaning:

- Car Incoming at n-th floor in APB operation
- Call Registered in case of Collective operation.

As shown in **Figure 1**, only one wire is required for the connection of a call button and the related signal.

See **8.4 - Electrical Specification** for further electrical information.

For Down Collective operation, **Landing Calls above the main floor are Down Calls**, Up Calls otherwise. Set the main floor with function **F02**.

For every configuration of **F03**, the maximum number of stops supported is reported, and also the **board address** for every expansion board.

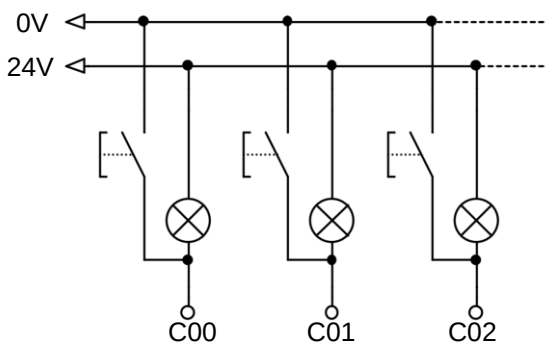

Figure 1

APB Max 8 stops		
M2 ELEMID	U0	K+C/L 00
	U1	K+C/L 01
	U2	K+C/L 02
	U3	K+C/L 03
	U4	K+C/L 04
	U5	K+C/L 05
	U6	K+C/L 06
	U7	K+C/L 07
M3 ELEMID	D0	LP 00
	D1	LP 01
	D2	LP 02
	D3	LP 03
	D4	LP 04
	D5	LP 05
	D6	LP 06
	D7	LP 07

Homelift Max 5 stops		
M2 ELEMID	U0	K/L 00
	U1	K/L 01
	U2	K/L 02
	U3	K/L 03
	U4	K/L 04
	U5	C/L 00
	U6	C/L 01
	U7	C/L 02
M3 ELEMID	D0	C/L 03
	D1	C/L 04
	D2	LP 00
	D3	LP 01
	D4	LP 02
	D5	LP 03
	D6	LP 04
	D7	X

Down Collective Max 8 stops		
M2 ELEMID	U0	K/L 00
	U1	K/L 01
	U2	K/L 02
	U3	K/L 03
	U4	K/L 04
	U5	K/L 05
	U6	K/L 06
	U7	K/L 07
M3 ELEMID	D0	C/L 00
	D1	C/L 01
	D2	C/L 02
	D3	C/L 03
	D4	C/L 04
	D5	C/L 05
	D6	C/L 06
	D7	C/L 07

Full Collective Max 6 stops		
M2 ELEMID	U0	U/L 00
	U1	U/L 01
	U2	U/L 02
	U3	U/L 03
	U4	U/L 04
	U5	D/L 01
	U6	D/L 02
	U7	D/L 03
M3 ELEMID	D0	D/L 04
	D1	D/L 05
	D2	K/L 00
	D3	K/L 01
	D4	K/L 02
	D5	K/L 03
	D6	K/L 04
	D7	K/L 05

C/L n	Landing calls
K/L n	Car calls
K+C/L n	Landing and Car calls in APB operation
D/L n	Down calls in Full Collective operation
U/L n	Up calls in Full Collective operation
LP n	Car position (1 signal for each floor)

For **F03 = Down Collective** and **F03 = Full Collective** only 32 stops configuration is shown. Add as many ELEXP board as needed to support the correct number of stops. For example in a 20 floors installation only 2 ELEXP are needed, one programmed with address 0 and one with address 1.

DC + 4 ELEXP max 32 stops					
M2 ELEMID	U0	K/L 00	M3 ELEXP Addr = 1	C00	K/L 14
	U1	K/L 01		C01	K/L 15
	U2	K/L 02		C02	K/L 16
	U3	K/L 03		C03	K/L 17
	U4	K/L 04		C04	K/L 18
	U5	K/L 05		C05	K/L 19
	U6	K/L 06		C06	C/L 14
	U7	K/L 07		C07	C/L 15
M3 ELEMID	D0	C/L 00		C08	C/L 16
	D1	C/L 01		C09	C/L 17
	D2	C/L 02		C10	C/L 18
	D3	C/L 03		C11	C/L 19
	D4	C/L 04	M3 ELEXP Addr = 2	C00	K/L 20
	D5	C/L 05		C01	K/L 21
	D6	C/L 06		C02	K/L 22
	D7	C/L 07		C03	K/L 23
M3 ELEXP Addr = 0	C00	K/L 08		C04	K/L 24
	C01	K/L 09		C05	K/L 25
	C02	K/L 10		C06	C/L 20
	C03	K/L 11		C07	C/L 21
	C04	K/L 12		C08	C/L 22
	C05	K/L 13		C09	C/L 23
	C06	C/L 08		C10	C/L 24
	C07	C/L 09		C11	C/L 25
	C08	C/L 10	M3 ELEXP Addr = 3	C00	K/L 26
	C09	C/L 11		C01	K/L 27
	C10	C/L 12		C02	K/L 28
	C11	C/L 13		C03	K/L 29
				C04	K/L 30
				C05	K/L 31
				C06	C/L 26
				C07	C/L 27
				C08	C/L 28
				C09	C/L 29
				C10	C/L 30
				C11	C/L 31

FC + 7 ELEXP max 32 stops								
M2 ELEMID	U0	U/L 00	M3 ELEXP Addr = 1	C00	K/L 10	M3 ELEXP Addr = 4	C00	K/L 22
	U1	U/L 01		C01	K/L 11		C01	K/L 23
	U2	U/L 02		C02	K/L 12		C02	K/L 24
	U3	U/L 03		C03	K/L 13		C03	K/L 25
	U4	U/L 04		C04	U/L 09		C04	U/L 21
	U5	D/L 01		C05	U/L 10		C05	U/L 22
	U6	D/L 02		C06	U/L 11		C06	U/L 23
	U7	D/L 03		C07	U/L 12		C07	U/L 24
M3 ELEMID	D0	D/L 04		C08	D/L 10		C08	D/L 22
	D1	D/L 05		C09	D/L 11		C09	D/L 23
	D2	K/L 00		C10	D/L 12		C10	D/L 24
	D3	K/L 01		C11	D/L 13		C11	D/L 25
	D4	K/L 02	M3 ELEXP Addr = 2	C00	K/L 14	M3 ELEXP Addr = 5	C00	K/L 26
	D5	K/L 03		C01	K/L 15		C01	K/L 27
	D6	K/L 04		C02	K/L 16		C02	K/L 28
	D7	K/L 05		C03	K/L 17		C03	K/L 29
M3 ELEXP Addr = 0	C00	K/L 06		C04	U/L 13		C04	U/L 25
	C01	K/L 07		C05	U/L 14		C05	U/L 26
	C02	K/L 08		C06	U/L 15		C06	U/L 27
	C03	K/L 09		C07	U/L 16		C07	U/L 28
	C04	U/L 05		C08	D/L 14		C08	D/L 26
	C05	U/L 06		C09	D/L 15		C09	D/L 27
	C06	U/L 07		C10	D/L 16		C10	D/L 28
	C07	U/L 08		C11	D/L 17		C11	D/L 29
	C08	D/L 06	M3 ELEXP Addr = 3	C00	K/L 18	M3 ELEXP Addr = 6	C00	K/L 30
	C09	D/L 07		C01	K/L 19		C01	K/L 31
	C10	D/L 08		C02	K/L 20		C02	X
	C11	D/L 09		C03	K/L 21		C03	X
				C04	U/L 17		C04	U/L 29
				C05	U/L 18		C05	U/L 30
				C06	U/L 19		C06	X
				C07	U/L 20		C07	X
				C08	D/L 18		C08	D/L 30
				C09	D/L 19		C09	D/L 31
				C10	D/L 20		C10	X
				C11	D/L 21		C11	X

4.2 - Serial Car Connection

With Serial Car connection ELEMID board is in the Control Panel, and ELECB in the Car Box (set **F51** to **Car & Calls**).

The table below shows all the possible configuration depending on the operation mode.

Serial Connection (ELEMID + ELECB Board)		
Mode	**ELEXP**	**Max stops**
APB	-	12
Down Collective	-	12
	1	24
	3	32
Full Collective	-	12
	2	18
	3	24
	6	32

Table 2

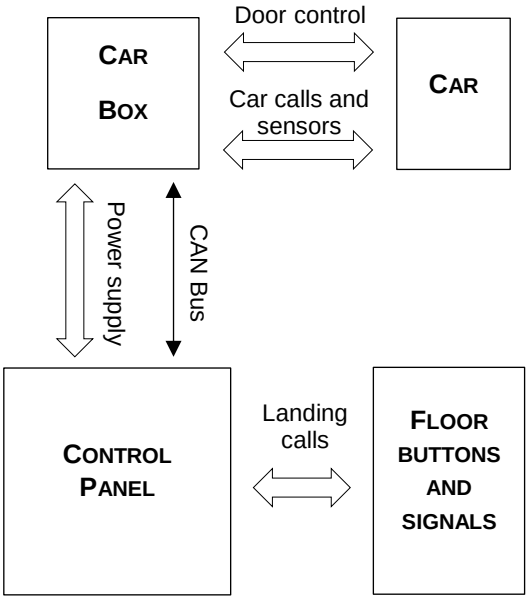

The user can add ELEXP boards to support installation with number of stops higher than 12, as shown on the table, up to **32 floors**.

The boards are connected **via CAN Bus**, and every ELEXP board should be programmed with the correct address by operating the **SW2** dipswitch: see **8.6.2 - Board Address** for more information.

In the next pages there are some tables that shows how to connect **Landing Calls** and **Car Calls** for every combination of ELEMID and ELEXP, depending on **F03** parameter.

Each Car or Landing Call terminal is both a board input for a pushbutton and output for a signal, that assumes two different meaning:

- Car Incoming at n-th floor in APB operation
- Call Registered in case of Collective operation.

As shown in **Figure 2**, only one wire is required for the connection of a call button and the related signal.

See **8.4 - Electrical Specification** for further electrical information.

For Down Collective operation, **Landing Calls above the main floor are Down Calls**, Up Calls otherwise. Set the main floor with function **F02**.

For every configuration of **F03**, the maximum number of stops supported is reported, and also the **board address** for every expansion board.

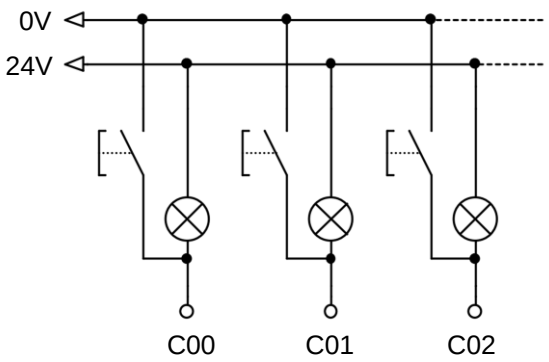

Figure 2

Down Collective + 1 ELECB max 12 stops		
M2 ELEMID	U0	C/L 00
	U1	C/L 01
	U2	C/L 02
	U3	C/L 03
	U4	C/L 04
	U5	C/L 05
	U6	C/L 06
	U7	C/L 07
M3 ELEMID	D0	C/L 08
	D1	C/L 09
	D2	C/L 10
	D3	C/L 11
	D4	X
	D5	X
	D6	X
	D7	X
M3-M4 ELECB Addr = 0	C00	K/L 00
	C01	K/L 01
	C02	K/L 02
	C03	K/L 03
	C04	K/L 04
	C05	K/L 05
	C06	K/L 06
	C07	K/L 07
	C08	K/L 08
	C09	K/L 09
	C10	K/L 10
	C11	K/L 11

Full Collective + 1 ELECB max 8 stops		
M2 ELEMID	U0	U/L 00
	U1	U/L 01
	U2	U/L 02
	U3	U/L 03
	U4	U/L 04
	U5	U/L 05
	U6	U/L 06
	U7	X
M3 ELEMID	D0	X
	D1	D/L 01
	D2	D/L 02
	D3	D/L 03
	D4	D/L 04
	D5	D/L 05
	D6	D/L 06
	D7	D/L 07
M3-M4 ELECB Address = 0	C00	K/L 00
	C01	K/L 01
	C02	K/L 02
	C03	K/L 03
	C04	K/L 04
	C05	K/L 05
	C06	K/L 06
	C07	K/L 07
	C08	X
	C09	X
	C10	X
	C11	X

APB + 1 ELECB max 8 stops		
M2 ELEMID	U0	K+C/L 00
	U1	K+C/L 01
	U2	K+C/L 02
	U3	K+C/L 03
	U4	K+C/L 04
	U5	K+C/L 05
	U6	K+C/L 06
	U7	K+C/L 07
M3 ELEMID	D0	LP 00
	D1	LP 01
	D2	LP 02
	D3	LP 03
	D4	LP 04
	D5	LP 05
	D6	LP 06
	D7	LP 07
M3-M4 ELECB Addr = 0	C00	K/L 00
	C01	K/L 01
	C02	K/L 02
	C03	K/L 03
	C04	K/L 04
	C05	K/L 05
	C06	K/L 06
	C07	K/L 07
	C08	X
	C09	X
	C10	X
	C11	X

Home lift + 1 ELECB max 8 stops		
M2 ELEMID	U0	C/L 00
	U1	C/L 01
	U2	C/L 02
	U3	C/L 03
	U4	C/L 04
	U5	C/L 05
	U6	C/L 06
	U7	C/L 07
M3 ELEMID	D0	LP 00
	D1	LP 01
	D2	LP 02
	D3	LP 03
	D4	LP 04
	D5	LP 05
	D6	LP 06
	D7	LP 07
M3-M4 ELECB Addr = 0	C00	K/L 00
	C01	K/L 01
	C02	K/L 02
	C03	K/L 03
	C04	K/L 04
	C05	K/L 05
	C06	K/L 06
	C07	K/L 07
	C08	X
	C09	X
	C10	X
	C11	X

DC + 1 ELECB + 2 ELEXP max 24 stops					
M2 ELEMID	U0	C/L 00	M3 ELEXP Addr = 1	C00	K/L 12
	U1	C/L 01		C01	K/L 13
	U2	C/L 02		C02	K/L 14
	U3	C/L 03		C03	K/L 15
	U4	C/L 04		C04	K/L 16
	U5	C/L 05		C05	K/L 17
	U6	C/L 06		C06	K/L 18
	U7	C/L 07		C07	K/L 19
M3 ELEMID	D0	C/L 08		C08	K/L 20
	D1	C/L 09		C09	K/L 21
	D2	C/L 10		C10	K/L 22
	D3	C/L 11		C11	K/L 23
	D4	C/L 12	M3 ELEXP Addr = 2	C00	C/L 16
	D5	C/L 13		C01	C/L 17
	D6	C/L 14		C02	C/L 18
	D7	C/L 15		C03	C/L 19
M3-M4 ELECB Addr = 0	C0	K/L 00		C04	C/L 20
	C1	K/L 01		C05	C/L 21
	C2	K/L 02		C06	C/L 22
	C3	K/L 03		C07	C/L 23
	C4	K/L 04		C08	X
	C5	K/L 05		C09	X
	C6	K/L 06		C10	X
	C7	K/L 07		C11	X
	C8	K/L 08			
	C9	K/L 09			
	C10	K/L 10			
	C11	K/L 11			

DC+ 1 ELECB + 4 ELEXP 32					
M2 ELEMID	U0	C/L 00	M3 ELEXP Addr = 2	C00	K/L 24
	U1	C/L 01		C01	K/L 25
	U2	C/L 02		C02	K/L 26
	U3	C/L 03		C03	K/L 27
	U4	C/L 04		C04	K/L 28
	U5	C/L 05		C05	K/L 29
	U6	C/L 06		C06	K/L 30
	U7	C/L 07		C07	K/L 31
M3 ELEMID	D0	C/L 08		C08	X
	D1	C/L 09		C09	X
	D2	C/L 10		C10	X
	D3	C/L 11		C11	X
	D4	C/L 12	M3 ELEXP Addr = 3	C00	C/L 16
	D5	C/L 13		C01	C/L 17
	D6	C/L 14		C02	C/L 18
	D7	C/L 15		C03	C/L 19
M3-M4 ELECB Addr = 0	C0	K/L 00		C04	C/L 20
	C1	K/L 01		C05	C/L 21
	C2	K/L 02		C06	C/L 22
	C3	K/L 03		C07	C/L 23
	C4	K/L 04		C08	C/L 24
	C5	K/L 05		C09	C/L 25
	C6	K/L 06		C10	C/L 26
	C7	K/L 07		C11	C/L 27
	C8	K/L 08	M3 ELEXP Addr = 4	C00	C/L 28
	C9	K/L 09		C01	C/L 29
	C10	K/L 10		C02	C/L 30
	C11	K/L 11		C03	C/L 31
M3 ELEXP Addr = 1	C00	K/L 12		C04	X
	C01	K/L 13		C05	X
	C02	K/L 14		C06	X
	C03	K/L 15		C07	X
	C04	K/L 16		C08	X
	C05	K/L 17		C09	X
	C06	K/L 18		C10	X
	C07	K/L 19		C11	X
	C08	K/L 20			
	C09	K/L 21			
	C10	K/L 22			
	C11	K/L 23			

Full Collective + 1 ELECB +2 ELEXP max 15 stops					
M2 ELEMID	U0	U/L 00	M3 ELEXP Addr = 2	C00	U/L 08
	U1	U/L 01		C01	U/L 09
	U2	U/L 02		C02	U/L 10
	U3	U/L 03		C03	U/L 11
	U4	U/L 04		C04	U/L 12
	U5	U/L 05		C05	U/L 13
	U6	U/L 06		C06	D/L 09
	U7	U/L 07		C07	D/L 10
M3 ELEMID	D0	D/L 01		C08	D/L 11
	D1	D/L 02		C09	D/L 12
	D2	D/L 03		C10	D/L 13
	D3	D/L 04		C11	D/L 14
	D4	D/L 05	M3 ELEXP Addr = 1	C00	K/L 12
	D5	D/L 06		C01	K/L 13
	D6	D/L 07		C02	K/L 14
	D7	D/L 08		C03	X
M3-M4 ELECB Addr = 0	C0	K/L 00		C04	X
	C1	K/L 01		C05	X
	C2	K/L 02		C06	X
	C3	K/L 03		C07	X
	C4	K/L 04		C08	X
	C5	K/L 05		C09	X
	C6	K/L 06		C10	X
	C7	K/L 07		C11	X
	C8	K/L 08			
	C9	K/L 09			
	C10	K/L 10			
	C11	K/L 11			

Full Collective + 1 ELECB +3 ELEXP max 21 stops								
M2 ELEMID	U0	U/L 00	M3 ELEXP Addr =2	C00	U/L 08	M3 ELEXP Addr = 3	C00	D/L 09
	U1	U/L 01		C01	U/L 09		C01	D/L 10
	U2	U/L 02		C02	U/L 10		C02	D/L 11
	U3	U/L 03		C03	U/L 11		C03	D/L 12
	U4	U/L 04		C04	U/L 12		C04	D/L 13
	U5	U/L 05		C05	U/L 13		C05	D/L 14
	U6	U/L 06		C06	U/L 14		C06	D/L 15
	U7	U/L 07		C07	U/L 15		C07	D/L 16
M3 ELEMID	D0	D/L 01		C08	U/L 16		C08	D/L 17
	D1	D/L 02		C09	U/L 17		C09	D/L 18
	D2	D/L 03		C10	U/L 18		C10	D/L 19
	D3	D/L 04		C11	U/L 19		C11	D/L 20
	D4	D/L 05	M3 ELEXP Addr = 1	C00	K/L 12			
	D5	D/L 06		C01	K/L 13			
	D6	D/L 07		C02	K/L 14			
	D7	D/L 08		C03	K/L 15			
M3-M4 ELECB Addr = 0	C0	K/L 00		C04	K/L 16			
	C1	K/L 01		C05	K/L 17			
	C2	K/L 02		C06	K/L 18			
	C3	K/L 03		C07	K/L 19			
	C4	K/L 04		C08	K/L 20			
	C5	K/L 05		C09	X			
	C6	K/L 06		C10	X			
	C7	K/L 07		C11	X			
	C8	K/L 08						
	C9	K/L 09						
	C10	K/L 10						
	C11	K/L 11						

Full Collective + 1 ELECB +5 ELEXP max 27 stops											
M2 ELEMID	U0	U/L 00	M3 ELEXP Addr = 3	C00	U/L 08	M3 ELEXP Addr = 4	C00	D/L 09	M3 ELEXP Addr = 5	C00	U/L 20
	U1	U/L 01		C01	U/L 09		C01	D/L 10		C01	U/L 21
	U2	U/L 02		C02	U/L 10		C02	D/L 11		C02	U/L 22
	U3	U/L 03		C03	U/L 11		C03	D/L 12		C03	U/L 23
	U4	U/L 04		C04	U/L 12		C04	D/L 13		C04	U/L 24
	U5	U/L 05		C05	U/L 13		C05	D/L 14		C05	U/L 25
	U6	U/L 06		C06	U/L 14		C06	D/L 15		C06	D/L 21
	U7	U/L 07		C07	U/L 15		C07	D/L 16		C07	D/L 22
M3 ELEMID	D0	D/L 01		C08	U/L 16		C08	D/L 17		C08	D/L 23
	D1	D/L 02		C09	U/L 17		C09	D/L 18		C09	D/L 24
	D2	D/L 03		C10	U/L 18		C10	D/L 19		C10	D/L 25
	D3	D/L 04		C11	U/L 19		C11	D/L 20		C11	D/L 26
	D4	D/L 05	M3 ELEXP Addr = 1	C00	K/L 12	M3 ELEXP Addr = 2	C00	K/L 24			
	D5	D/L 06		C01	K/L 13		C01	K/L 25			
	D6	D/L 07		C02	K/L 14		C02	K/L 26			
	D7	D/L 08		C03	K/L 15		C03	X			
M3-M4 ELECB Addr = 0	C0	K/L 00		C04	K/L 16		C04	X			
	C1	K/L 01		C05	K/L 17		C05	X			
	C2	K/L 02		C06	K/L 18		C06	X			
	C3	K/L 03		C07	K/L 19		C07	X			
	C4	K/L 04		C08	K/L 20		C08	X			
	C5	K/L 05		C09	K/L 21		C09	X			
	C6	K/L 06		C10	K/L 22		C10	X			
	C7	K/L 07		C11	K/L 23		C11	X			
	C8	K/L 08									
	C9	K/L 09									
	C10	K/L 10									
	C11	K/L 11									

Full Collective + 1 ELECB +6 ELEXP max 32 stops											
M2 ELEMID	U0	U/L 00	M3 ELEXP Addr = 3	C00	U/L 08	M3 ELEXP Addr = 4	C00	U/L 20	M3 ELEXP Addr = 5	C00	D/L 08
	U1	U/L 01		C01	U/L 09		C01	U/L 21		C01	D/L 09
	U2	U/L 02		C02	U/L 10		C02	U/L 22		C02	D/L 10
	U3	U/L 03		C03	U/L 11		C03	U/L 23		C03	D/L 11
	U4	U/L 04		C04	U/L 12		C04	U/L 24		C04	D/L 12
	U5	U/L 05		C05	U/L 13		C05	U/L 25		C05	D/L 13
	U6	U/L 06		C06	U/L 14		C06	U/L 26		C06	D/L 14
	U7	U/L 07		C07	U/L 15		C07	U/L 27		C07	D/L 15
M3 ELEMID	D0	X		C08	U/L 16		C08	U/L 28		C08	D/L 16
	D1	D/L 01		C09	U/L 17		C09	U/L 29		C09	D/L 17
	D2	D/L 02		C10	U/L 18		C10	U/L 30		C10	D/L 18
	D3	D/L 03		C11	U/L 19		C11	X		C11	D/L 19
	D4	D/L 04	M3 ELEXP Addr = 1	C00	K/L 12	M3 ELEXP Addr = 2	C00	K/L 24	M3 ELEXP Addr = 6	C00	D/L 20
	D5	D/L 05		C01	K/L 13		C01	K/L 25		C01	D/L 21
	D6	D/L 06		C02	K/L 14		C02	K/L 26		C02	D/L 22
	D7	D/L 07		C03	K/L 15		C03	K/L 27		C03	D/L 23
M3-M4 ELECB Addr = 0	C0	K/L 00		C04	K/L 16		C04	K/L 28		C04	D/L 24
	C1	K/L 01		C05	K/L 17		C05	K/L 29		C05	D/L 25
	C2	K/L 02		C06	K/L 18		C06	K/L 30		C06	D/L 26
	C3	K/L 03		C07	K/L 19		C07	K/L 31		C07	D/L 27
	C4	K/L 04		C08	K/L 20		C08	X		C08	D/L 28
	C5	K/L 05		C09	K/L 21		C09	X		C09	D/L 29
	C6	K/L 06		C10	K/L 22		C10	X		C10	D/L 30
	C7	K/L 07		C11	K/L 23		C11	X		C11	D/L 31
	C8	K/L 08									
	C9	K/L 09									
	C10	K/L 10									
	C11	K/L 11									

5 - INPUT AND OUTPUT SIGNALS

5.1 - Input Signals

► ELEMID

M4	USS		C	Up Stop Switch	Positioning switch inputs. By default NC contacts. USS and DSS polarity can be adjusted by **F32** parameter	**5.5.1 - Positioning and Releveling**, **F32**
	DSS		C	Down Stop Switch		
	ULS		NC	Top Floor Limit Switch		
	DLS		NC	Bottom Floor Limit Switch		
	ISQ		NC	Inspection Box Contact	Enable Inspection Operation. It must be CLOSED with the system in NORMAL service, and OPEN in INSPECTION state.	**3.2.3 - Inspection Operation**
	URI		NO	Inspection Up Button	Inspection Box Directions	
	DRI		NO	Inspection Down Button		
	ODB	P	NC	ODB	Door Opening Button. If the lift is at floor opens the door in automatic and semiautomatic door modes.	
		S	-	-	-	-
	CDB	P	NO	CDB	Door Quick Closing Button (Active only in Collective operation). Forces the doors to close in automatic and semiautomatic door modes.	
		S	-	-	-	-
	FCI		NO	EC / FC	EC - Occupied Car (load > 1 person) in Automatic Push Button operation FC - Full Car (load ≈ maximum capacity) in Collective operation	**3.2.1 - Automatic Service**
	OCI		NO	OCI	Car Overload Switch (load > 110% loading capacity), contact CLOSED with car overload.	**3.2.1 - Automatic Service**
	0V	*	0V voltage	0V aux terminal	0V	
M5	IP1	P	NC	PE1	Photocell and safety edge contact. (CLOSED with beam free, and OPEN with beam interrupted)	**5.5.3 - Automatic Door Control**
		S	-	-	-	-
	EA1		NC	External Alarm 1	The opening of this input causes the OUT OF SERVICE with immediate stop of the car. It can be connected, for example at the contact of the MAINS PHASE CONTROL device or at FAULT contact of the VVVF. When the input closes again after an opening, the lift automatically returns to service with a reset operation	E16
	EA2		NC	External Alarm 2	The opening of this input causes the car to stop at the end of the current travel. It can be connected for example to the contact of the oil thermostat	E17
	RC		C	Run Contactors Control	Connect to auxiliary contacts of contactors that control car movement that if stuck, could lead to dangerous situations. It is possible to set the input to be active during RUN (NO contacts in parallel) or active with car STOPPED (NC contacts in series)	**F37**, **F38**

	=	Mandatory wiring
	=	If not used leave open
	=	If not used connect to 24V
P	=	Only in Parallel Car connection
S	=	Only in Serial Car connection
NC	=	Normally Closed input
NO	=	Normally Open input
C	=	Configurable input (NC or NO)
-	=	Not used

M5	ROP		NO	Emergency Operation Enable	Activates Emergency Operation.	**3.2.7 - Emergency Operation**
	REL		NO	Releveling Enable	Connect to an auxiliary contact of the SAFETY CIRCUIT which enables releveling with open doors and that provides the door contact by-pass	**5.5.1 - Positioning and Releveling**
	FO		NC	Fire-Fighters Operation Enable	Fire Fighter Operation Inputs	**3.2.9 - Fire-Fighter Operation EN81-72 / EN81-73, F44, F45, F46**
	TH1		NC	Motor Thermistors	Connect to a PTC thermistor: if the thermistor resistance increases an alarm occurs. Make a jumper between TH1 and TH2 if not used.	**F12, F33, E15**
	TH2					
	0V	*	0V voltage	0V aux terminal	0V	

M10	SCC		NC	Safety Chain Common	Voltage reference of Safety Circuits. Grounded on Control Panel.	**5.5.2 - Safety Chain**
	SC1		NC	Safety Chain Optoisolated Inputs	Safety Chain Beginning. Downstream of the Operation Automatic Valve.	
	SC2		NC		1st Section. Downstream of the Overtravel switch	
	SC3		NC		2nd Section. Downstream of various safety switches, of the Normal Service / Inspection switch, and the Landing Door Closed Contacts (only for Semiautomatic doors)	
	SC4		NC		3rd Section. Downstream of the Car Door Contact	
	SC5		NC		4th Section. Donwstream of the Landing Door Locked Contacts	

	=	Mandatory wiring
	=	If not used leave open
	=	If not used connect to 24V
P	=	Only in Parallel Car connection
S	=	Only in Serial Car connection
NC	=	Normally Closed input
NO	=	Normally Open input
C	=	Configurable input (NC or NO)
-	=	Not used

5.2 - Input Signals only for Serial Car connection

► ELECB

M3	ODB	S	NO	ODB	Door Opening Button. If the lift is at floor opens the door in automatic and semiautomatic door modes.	-
	CDB	S	NO	CDB	Door Quick Closing Button (Active only in Collective operation). If there are registered calls forces the doors to close in automatic and semiautomatic door modes.	-
M5	IPA	S	NC	Fire-Fighters Operation Enable	Fire-Fighter Inputs	**3.2.9 - Fire-Fighter Operation EN81-72 / EN81-73**
	IKF	S	NO	Fire-Fighters car key switch		
	IPB	S	-	-	-	
M8	IEC	S	NO	EC	EC - Occupied Car (load > 1 %) in Automatic Push Button operation in Collective Operation if it goes OFF at floor, cancels all the registered car calls	
	IFC	S	NO	FC	Full Car (load ≈ maximum capacity) in Collective operation	
	IOC	S	NO	OCI	Car Overload Switch (load > 110% loading capacity), contact CLOSED with car overload.	
M9	PE1	S	NC	PE1	Photocell and safety edge contact. Side 1	**5.5.3 - Automatic Door Control**
M10	SE1	S	NC	DOL1	Door Open Limit switch. Side 1	
	DCL2		NO	DCL1	Door Close Limit switch. Side 1 contact 1	
	DCL1		NO	DCL1	Door Close Limit switch. Side 1 contact 2	
	TH4		NC	TH	Door motor thermistors side 1 contact 1	
	TH3		NC	TH	Door motor thermistors side 1 contact 1	
M12	SE2	S	NC	DOL2	Door Open Limit switch. Side 2	
	DCL4		NO	DCL2	Door Close Limit switch. Side 2 contact 1	
	DCL3		NO	DCL2	Door Close Limit switch. Side 2 contact 2	
	TH6		NC	TH	Door motor thermistors side 2 contact 1	
	TH5		NC	TH	Door motor thermistors side 2 contact 2	
M13	PE2	S	NC	PE2	Photocell and safety edge contact. Side 2	
M14	ODB	S	NO	ODB	Door Opening Button Duplicate	
	ISC	S	NC	Inspection Box contact	Inspection box at the car top	**3.2.3 - Inspection Operation**
	IDC	S	NO	Inspection Down Button		
	IUC	S	NO	Inspection Up Button		

5.3 - Output Signals

► **ELEMID**

M6	PB0	T	Display B0	Display control outputs	
	PB1	T	Display B1		
	PB2	T	Display B2		
	GNG	T	GONG	Acoustic signal of car coming	
	NUS	T	NUS	Direction Up Signal (APB operation), Next Leaving Up Signal (Collective operation)	
	NDS	T	NDS	Direction Down Signal (APB operation), Next Leaving Down Signal (Collective operation)	
	OP0	T	-	Programmable output	**5.6 - Programmable Inputs / Outputs**
	+24V	*	24V voltage	24V aux terminal	
	0V	*	0V voltage	0V aux terminal	
M8	AU	T	Up Control		F04
	AD	T	Down Control		
	HS	T	High Speed Control	Motor speed control	F04
	LS	T	Low Speed Control		
	LEV	T	System Releveling	Releveling operation active	**3.2.5 - Releveling**
	EME	T	System in Emergency	Emergency operation active	**3.2.7 - Emergency Operation**
	+24V	*	24V voltage	24V aux terminal	
	0V	*	0V voltage	0V aux terminal	
M9	OC1	R	NO contact for EC relay	Occupied Signal (APB operation), Car Light Control in (Collective operation)	
	OC2	*	Common for EC relay		
	OCX	R	NC contact for EC relay		
	DO	R	Door Opening Control	NO relay contacts for automatic and semiautomatic door control	**5.5.3 - Automatic Door Control**
	DC	R	Door Closing Control		
	CD	*	Common Door Control		

X	=	Unconnected
T	=	Transistor Output
O	=	Optoisolated Output
R	=	Relay Output
*	=	Voltage reference
	=	Programmable Output
	=	Mandatory Connection

For OC1-OC2 Outputs the function can be changed. See **5.6 - Programmable Inputs / Outputs**.

5.3.1 - ELEMID programmable I/O signals

M7	IO0	T	Programmable IO0	Programmable as Input or Output	**5.6 - Programmable Inputs / Outputs**
	IO1	T	Programmable IO1		
	IO2	T	Programmable IO2		
	IO3	T	Programmable IO3		
	0V	*	0V voltage	0V aux terminal	
	+24V	*	24V voltage	24V aux terminal	

X	=	Unconnected
T	=	Transistor Output
O	=	Optoisolated Output
R	=	Relay Output
*	=	Voltage reference
	=	Programmable Output
	=	Mandatory Connection

5.4 - Output Signals only for Serial Car connection

► ELECB

M11	OB1	*	LC	Car Light/Fan control	
	OB2	R			
M10	CD1	*	Common Door Control	Door control side 1	**5.5.3 - Automatic Door Control**
	DC1	R	Door Closing Control		
	DO1	R	Door Opening Control		
M12	CD2	*	Common Door Control	Door control side 2	
	DC2	R	Door Closing Control		
	DO2	R	Door Opening Control		
M6	CB4	T	Display B4	Display Control outputs	**F55**
	CB3	T	Display B3		
	CB2	T	Display B2		
	CB1	T	Display B1		
	CB0	T	Display B0		
	GNG	T	GNG	Acoustic signal of car incoming	
	NUS	T	NUS	Direction Up Signal (APB operation), Next Leaving Up Signal (Collective operation)	
	NDS	T	NDS	Direction Down Signal (APB operation), Next Leaving Down Signal (Collective operation)	
	OPF	T	OCO	Car overload acoustic signal	
M7	OPA	T	CAM	Retiring Cam	
	OPC	T	BYO	By-pass Active for ENE8120	
	OPD	T	OS2	Out of service (Blinking mode)	
	OPE	T	-	-	
	0V	*	0V voltage	0V aux terminal	

X = Unconnected
T = Transistor Output
O = Optoisolated Output
R = Relay Output
* = Voltage reference
= Programmable Output
= Mandatory Connection

5.5 - Connections details

5.5.1 - Positioning and Releveling

ELEMID board manages car position through 4 magnetic switches sensed through 4 inputs:

1. USS - Up Stop Switch (Downward Slowdown)
2. DSS - Down Stop Switch (Upward Slowdown)
3. ULS - Top Floor Limit Switch
4. DLS - Bottom Floor Limit Switch

USS, DSS switches are used to slow down the car and stop it.

The contacts of USS and DSS can be of NO or NC type, with appropriate programming.

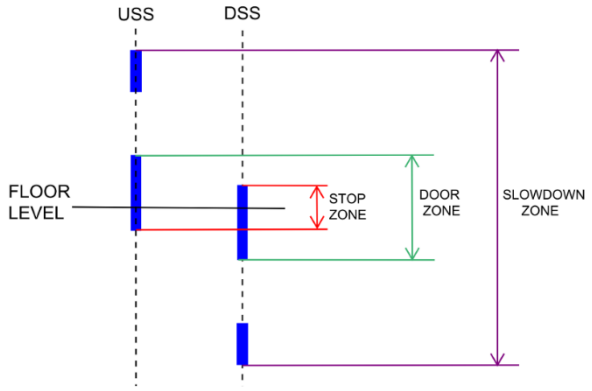

Figure 3

If necessary, for example due to the speed of the system or to the distance between the floors, the magnets that control the slowdown can "cross", i.e. the magnet, which controls the slowdown to the next floor may be positioned immediately after the magnets of floor zone (stop/door zone). No programming is required for the board in this case, as software adjusts automatically.

It is however required to provide a distance of a few centimetres between the floor zone magnets and the slow down on, to allow the correct reading of the input (this distance depends on the system speed); usually 5 cm are sufficient, and therefore the **minimum distance between floors** allowed is equal to the **slowdown space + door unlock space + 5 cm**.

ULS, DLS switches are used for reset operation and to slow the car at the upper and lower floors.

The switches ULS and DLS must be of type NC and driven at end floors by a magnet with a length equal to slowdown distance minus 2 cm, as shown in the figure below.

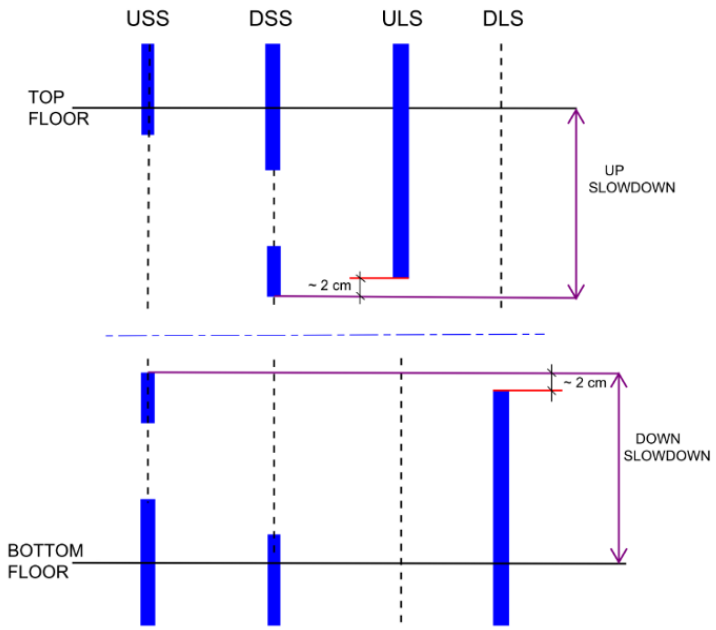

Figure 4

► **Magnets position for installation without releveling**

If releveling is not needed, the magnets placement scheme to follow is the one in **Figure 5**.

USS - Up Stop Switch (Downward Slowdown)
DSS - Down Stop Switch (Upward Slowdown)
ULS - Top Floor Limit Switch
DLS - Bottom Floor Limit Switch

A = 150mm

D = 20mm

R = 100mm

X1 = Upward Slowdown Space

X2 = Upward Stop Space

Y1 = Downward Slowdown Space

Y2 = Downward Stop Space

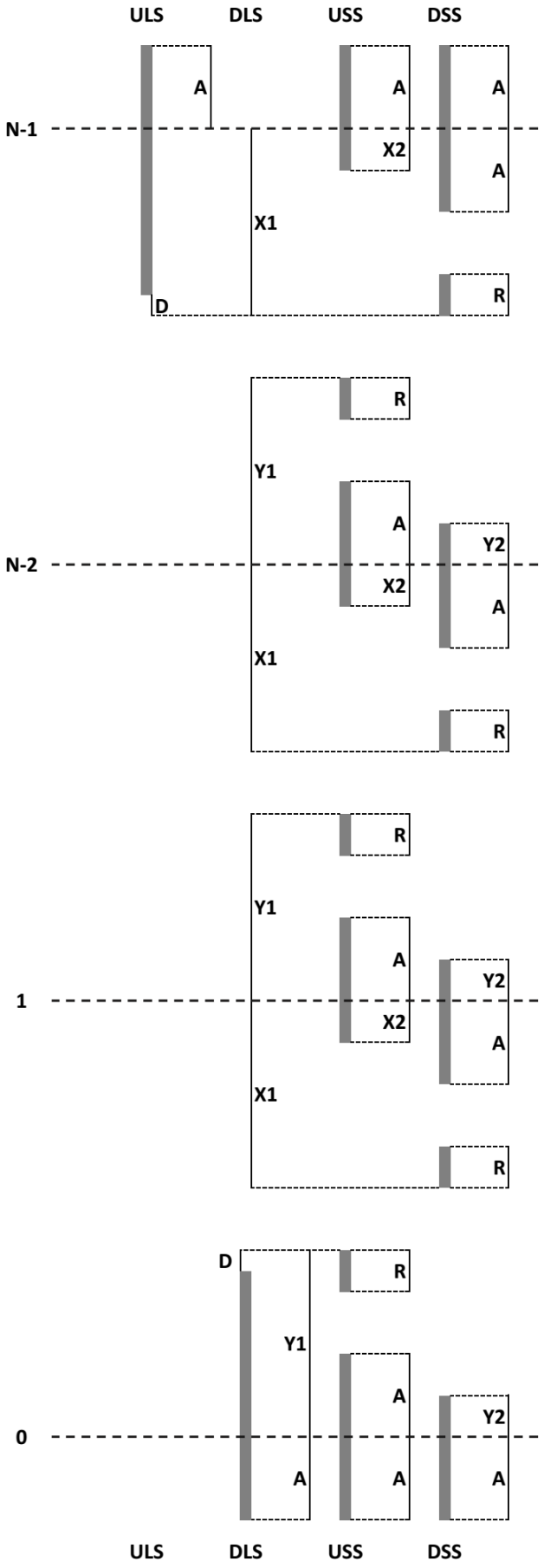

Figure 5

► Magnets position for installation with releveling by Safety Circuit

For installation with releveling by Safety Circuit, for example hydraulic lifts, the magnets scheme to follow is the one in **Figure 6**.

In this case there is another magnet switch **IZS** that functions as a Door zone switch: this enables the Safety Circuit in the correct zone, so the board can command the releveling correctly. This switch must have a NO contact (closed at floor).

USS - Up Stop Switch (Downward Slowdown)

DSS - Down Stop Switch (Upward Slowdown)

ULS - Top Floor Limit Switch

DLS - Bottom Floor Limit Switch

IZS - Releveling zone switch

A = 150mm

D = 20mm

R = 100mm

X1 = Upward Slowdown Space

X2 = Upward Stop Space

Y1 = Downward Slowdown Space

Y2 = Downward Stop Space

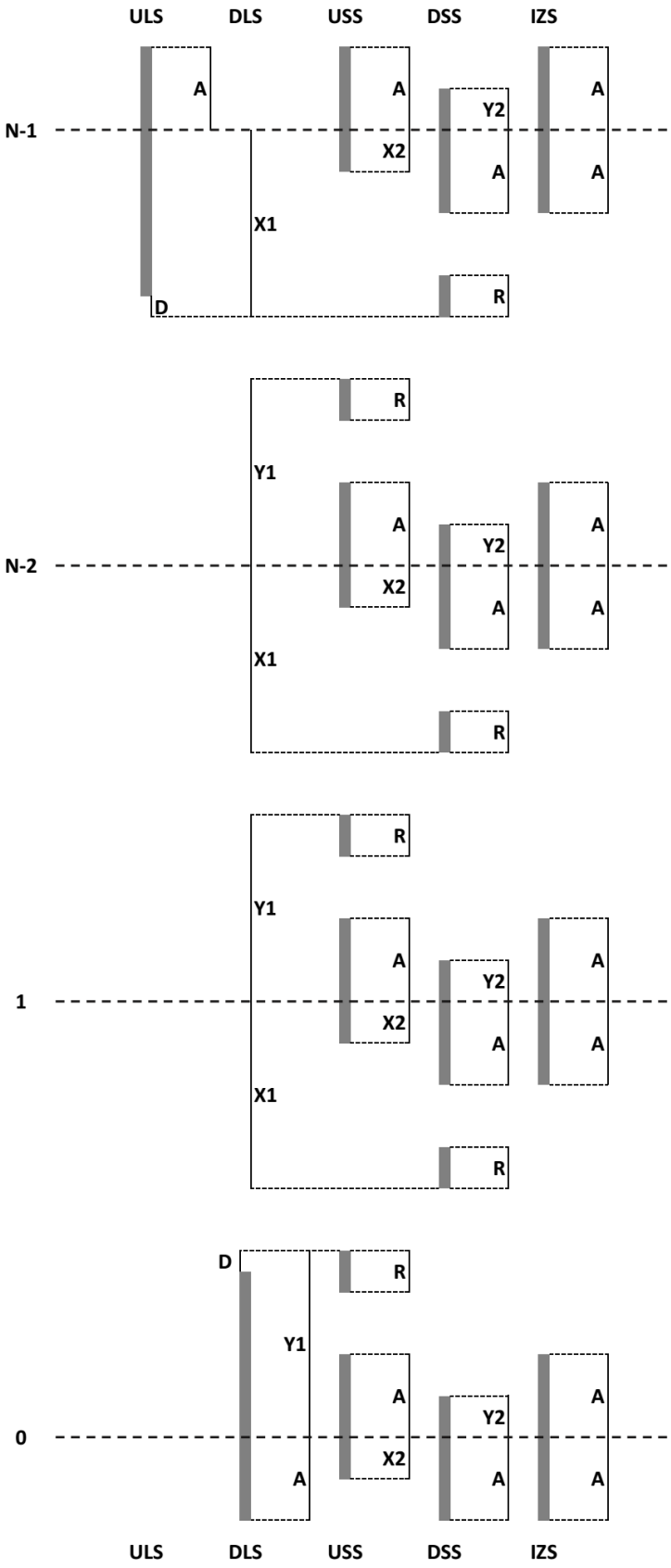

Figure 6

► **Safety Circuit connection for releveling**

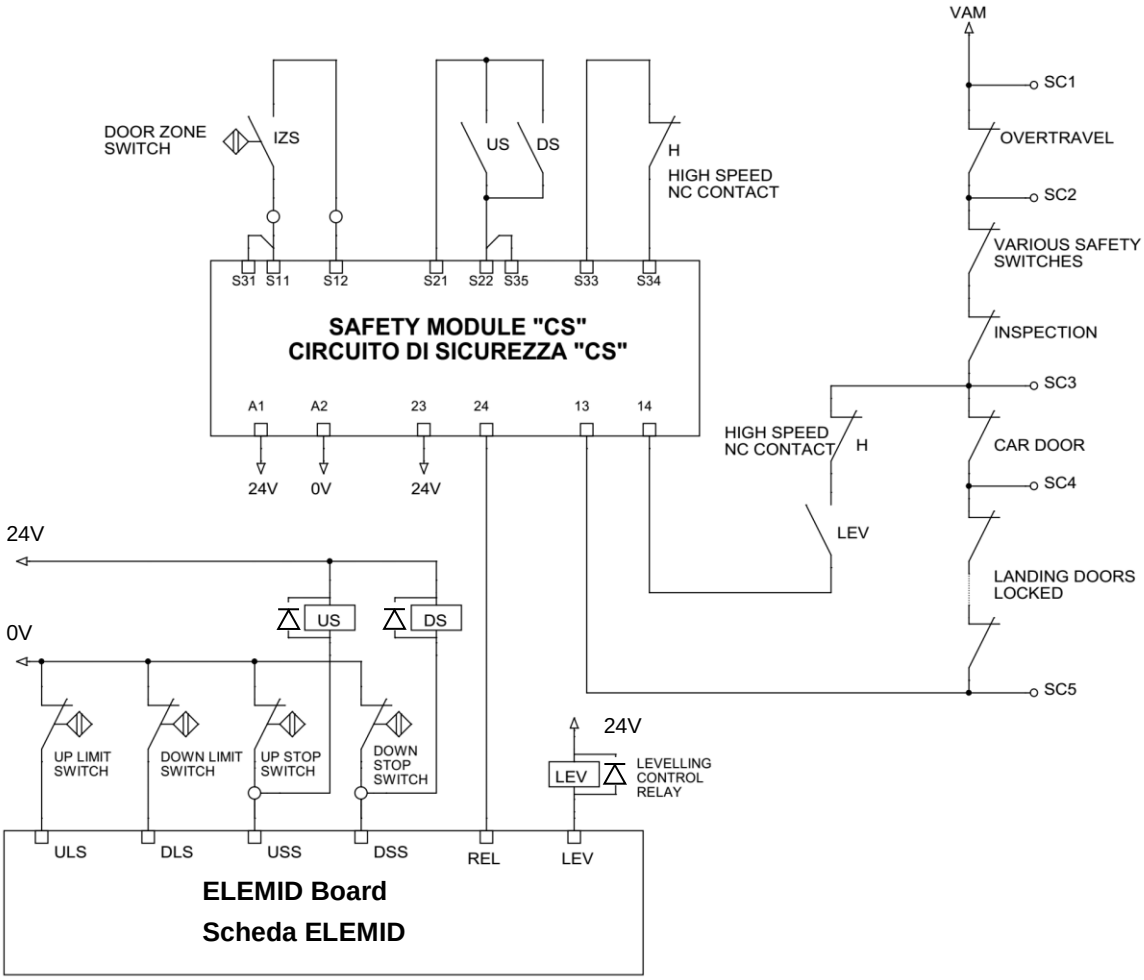

Figure 7 - Concept schematic of safety module connection

When the lift is not in High Speed and within the Door Zone, Safety Module activates ELEMID board **REL input**.

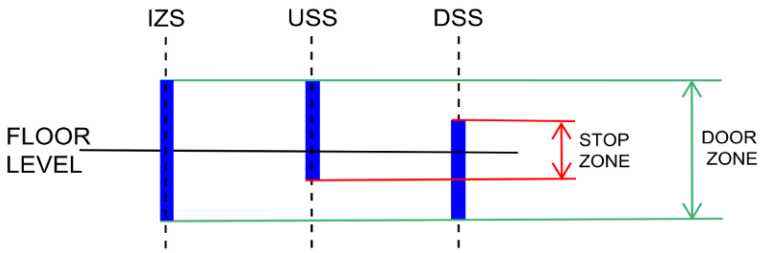

Figure 8

At this point the board, if detect any changes in USS and DSS inputs, commands releveling activating the correct **Direction** and **Speed** level, and **LEV output**, and its relay enables the by-pass of the doors contacts.

For more information about the connection of Safety Chain see **5.5.2 - Safety Chain** .

5.5.2 - Safety Chain

Safety chain connection is different for every door configuration, as shown in the concept schematic in **Figure 9**.

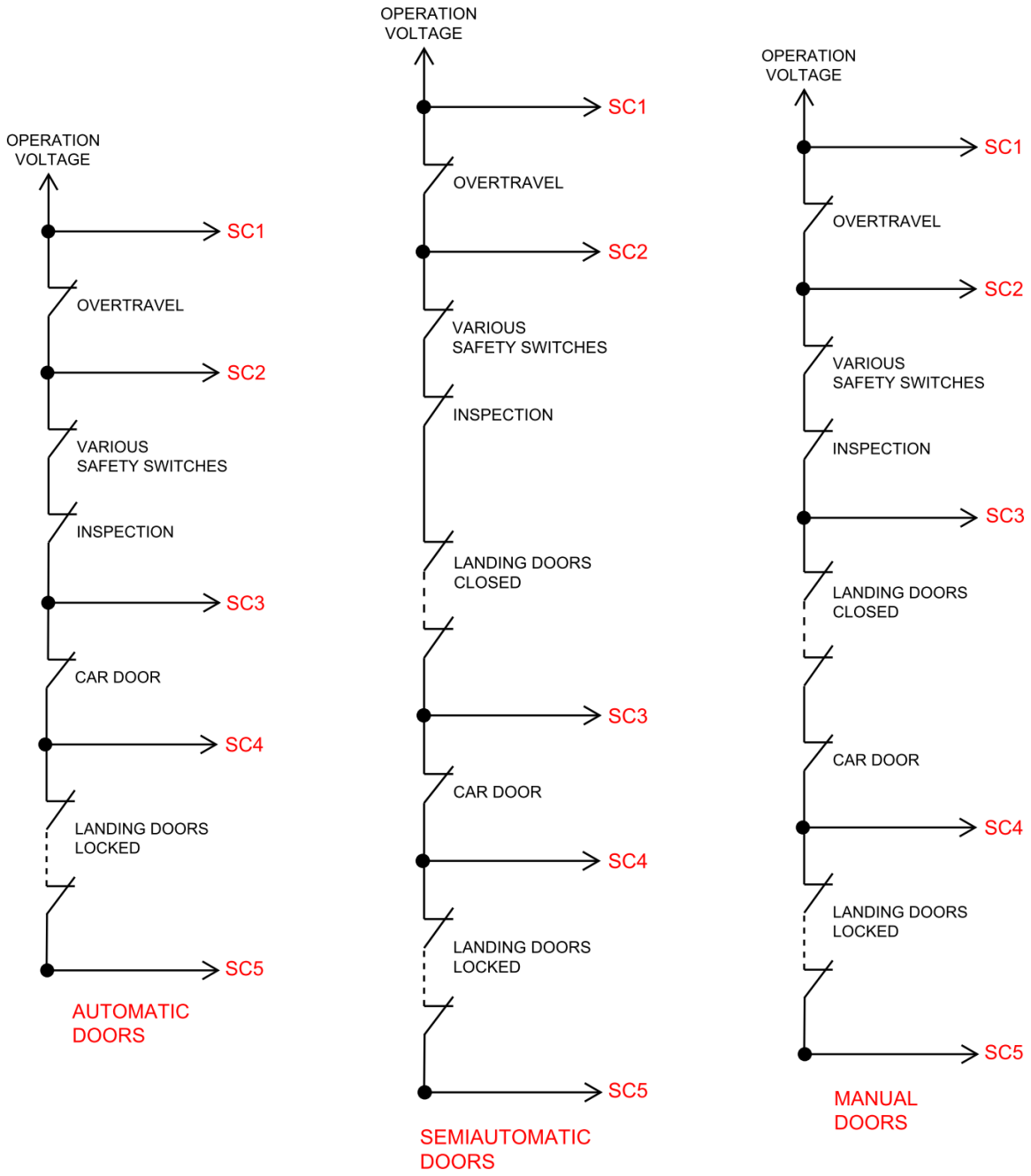

Figure 9 - Concept schematic of Safety Chain

Various safety switches can include:

- Stop switch in the pit
- Overspeed Governor
- Overspeed Governor Tension Device
- Safety Gear
- ...

5.5.3 - Automatic Door Control

► Parallel Car Connection

ELEMID controls automatic doors in Parallel Car Connection by **M9** terminals **CD**, **DC**, **DO**. Connect these terminals to the VVVF or mini contactors that drive the door motor. In this configuration only one car entrance is supported.

A **Door Open Limit (DOL)** switch input can be programmed on one among **IO0** – **IO3** inputs on **M7** connector (see **8.5 - Boards Layout**).

The connection of the **DOL** switch to the board is optional:

- if the connection is not provided but the limit switch is present, connect it in series with the opening contactor coil. The door opening command from the board will turn off after the time set by the function **F22** (see **8.3 - Functions**), so so it is important that this time is quite close to the actual time of opening, with a margin of at least one second. In this case connect **DOL** input to **0V**.
- if the limit switch is connected to **DOL**, the door opening command will turn off as soon as the limit switch opens; the time set in **F22** is a protection time and it works only in case of missing opening of the contact, so it can be set to an higher time, for example to allow the "tuning" procedure of the door regulator at switching on.

ELEMID board has also a photocell input: **IP1** on **M5**. Also this connection is optional:

- For installations with no photocell, connect **IP1** to **0V**.
- For installations with photocell, connect **IP1** to a normally closed contact (contact closed when the beam is free).

► Serial Car Connection

For Serial Car Connection ELECB controls automatic doors.
In this case inputs and outputs are doubled, because this board can support two car entrances.

There are two sets of outputs: **CD1**, **DC1**, **DO1** (**M10**) for side 1, e **CD2**, **DC2**, **DO2** (**M12**) for side 2.

Same thing for photocell and **DOL** inputs: **PE1 (M9)**, **SE1** (**M10**) for side 1, and **PE2 (M13)**, **SE2** (**M12**) for side 2. Connect these signals with the same logic as it would be in Parallel Car connection with ELEMID.

For one entrances car simply do not connect any I/O for side 2 and make sure that **F07**:Car Entrances=1.

Regarding door motor thermistors inputs (TH3, TH4, TH5, TH6) and door close limit inputs (DCL1, DCL2, DCL3, DCL4) you have to connects properly depending on the number of car entrances:

- **One car entrance only at side 1**

In case of a single car entrance at side **1** you have to connect **DCL1** and **DCL2** to respective close limit contacts on door motor for side **1**, while you have to connect **DCL3** and **DCL4** together; then you have to connect **TH3** and **TH4** to respective thermistor contacts on door motor for side **1**, while you have to connect **TH5** and **TH6** together.

- **One car entrance only at side 2**

In case of a single car entrance at side **2** you have to connect **DCL3** and **DCL4** to respective close limit contacts on door motor for side **2**, while you have to connect **DCL1** and **DCL2** together; then you have to connect **TH5** and **TH6** to respective thermistor contacts on door motor for side **2**, while you have to connect **TH3** and **TH4** together.

- **Double car entrance, side 1 and 2**

In case of double car entrance you have to connects **DCL1** and **DCL2** to respective close limit contacts on door motor for side **1**, while you have to connect **DCL3** and **DCL4** to respective close limit contacts on door motor for side **2**; then you have to connect **TH3** and **TH4** to respective thermistor contacts on door motor for side **1**, while you have to connect **TH5** and **TH6** to respective thermistor contacts on door motor for side **2**.

If you do not want to use thermistors, you have to connect **TH3** to **0V**, if you do not want to use door close limit you have to connect **DCL1** to **0V**.

F08.n	Behaviour
Side 1	ELECB open and close only side 1
Side 2	ELECB open and close only side 2
Simultaneous	ELECB open and close both sides simultaneously.
Selective	Every side has its own floor and car call, see also **6.2 - Selective Door Opening**
None	No open or close command are activated

Table 3 - Behaviour of ELECB board depending on F08

5.5.4 - On Service output

On ELEMID board it is possible to programm one among **IO0** – **IO3** outputs on **M7** as an On Service output (**OS**) that is **normally ON** when the lift operates correctly, and it is turned **OFF** by the board itself when one of the following alarm is registered:

E09, E10, E11, E14, E15.

This output can be used to control an external relay with NO contacts upstream the safety chain, to definitely disable the lift (attention, this also disables Inspection Operation).

Normal operation can be restored by deleting any registered alarms (see **3.3.2 - Diagnostics**).

5.5.5 - Star-delta start for Hydraulic drives

ELEMID supports Star-delta Hydraulic drives.

In **upwards** run, after a programmable delay, **STD** programmable output **activates**. This can be used to control external contactors to switch the motor connection from Star to Delta (see **5.6 - Programmable Inputs / Outputs** and **F56**:T. StarDelta).

In **down** run **STD** output is always **deactivated**.

This output activates in every operating mode.

5.5.6 - Stand by for energy saving

Setting **F49** to a value greater than 0 activates standby mode.

The **SBY** programmable output is **active** during **normal operation** (see **5.6 - Programmable Inputs / Outputs**).

If the car is at floor and in automatic operation, when no calls are registered for the time **F49**, **SBY** output is **deactivated**.

Any landing or car call **activates SBY** and turn the board to normal operating conditions.

This output can be used to control relays or contactors that cut the power supply for control panel auxiliary circuits, to achieve energy saving.

5.5.7 - Soft stop for Hydraulic drives

ELEMID board supports hydraulic drives with soft stop input, by using programmable output **SS** (see **5.6 - Programmable Inputs / Outputs**) as a soft stop command and **F16**, **F34** and **F57** parameters to control contactor timing.

SS programmable output activates only during upwards movements, as shown in **Figure 10**.

At first **SS** activates with **AU** and **HS**, and at stop deactivates before AU by a time defined by **F57**.

To set **F57** correctly see hydraulic drive data sheet, because this time has to be greater than the Soft Stop time: this enables the car to stop slowly and **AU** contactor will not drop too early making the car do a sudden stop.

Now set **F16** = **F57**. In this configuration the board will deactivate **SS** output immediately when the car reaches the destination floor.

If the car stops lower than the floor level, increase **F16** to adjust the stop, but make sure that **F16** > **F57** always; for this situation **Figure 11** shows the timing of the output signals.

For releveling upwards the board uses the same logic before, set **F34** = **F57** than if required adjust the stop by increasing **F34**.

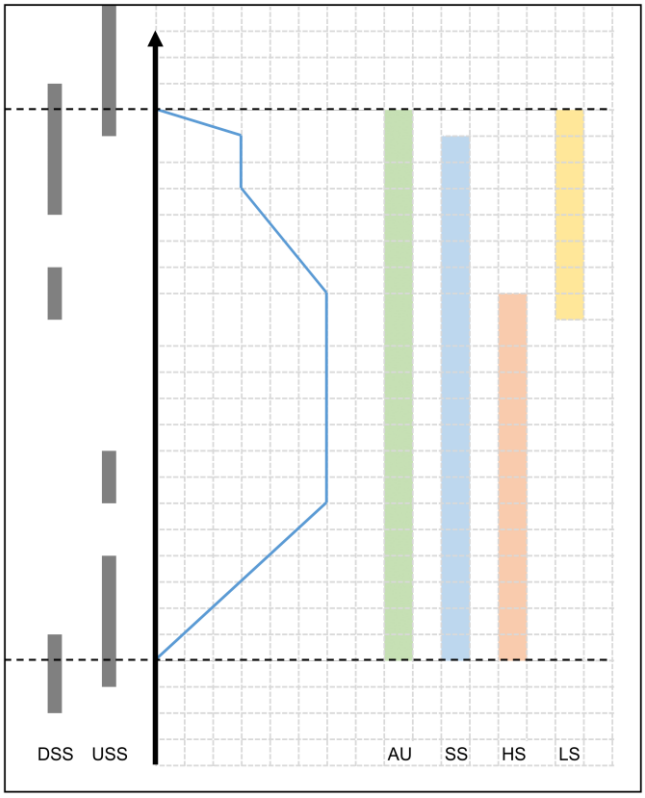

Figure 10

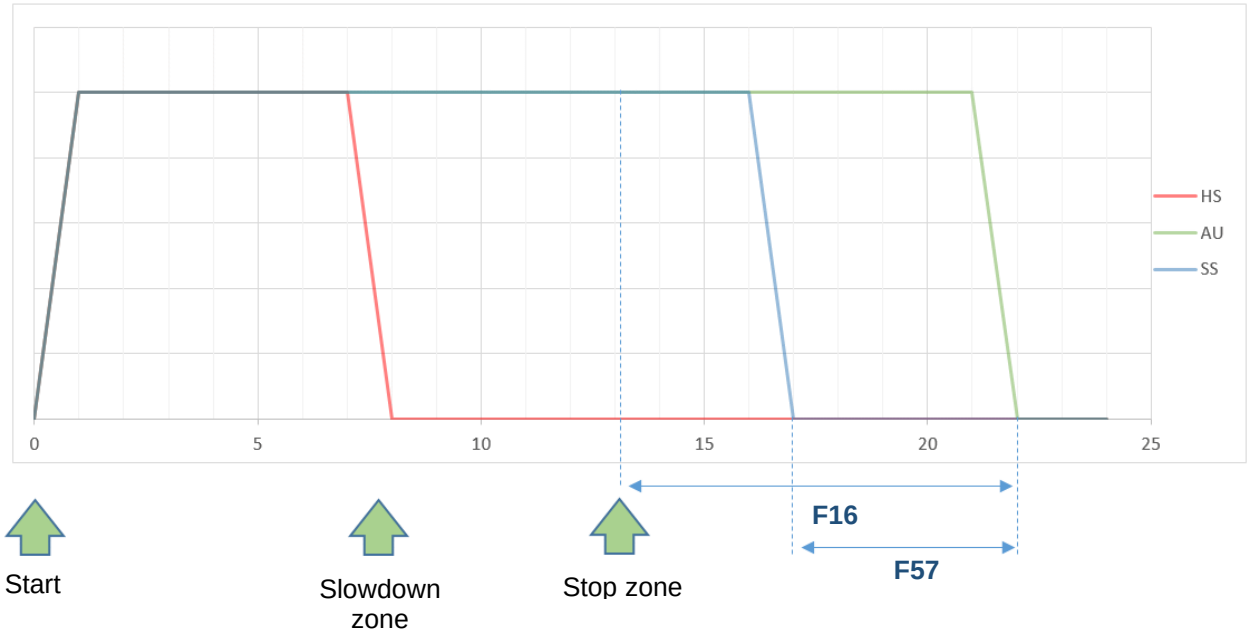

Figure 11

5.5.8 - Short Floor Features (only terminal floors)

REQUIREMENTS

Short floor function is possible only for the bottom and/or for the top floor.

Short floor minimum distance is 160 mm at 1m/s, low speed 0,1m/s.

It is calculated based on magnets of 20mm, the minimum possible.

Minimum magnet size is 20mm (with low speed running maximum 10 cm/s).

SETTINGS

Place magnets as indicated in Figure 1: Magnet disposal, Set function '**F58**: Short Floor' to 'Yes'.

Program one among **IO0** – **IO3** inputs on **M7** as **TDC.**

Connect a new magnetic switch called SFS between 0V and TDC programmed input of ELEMID board, see Figure 2: Modification example to an existing control panel for schematics reference.

MAGNETS POSITIONING

Magnets positioning remains standard for any floor with the following exceptions:

1) Top floor is a short floor.

   a. Place magnets between floor n and floor n-1 in small enough to be placed in the short floor distance (see Figure 1: Magnet disposal)

   b. Add SFS magnet as indicated in GREEN in Figure 1: Magnet disposal

2) Bottom floor is a short floor.

   a. Place magnets between floor 0 and floor 1 small enough to be placed inside the short floor distance (see Figure 1: Magnet disposal)

   b. Add SFS magnet as indicated in RED in Figure 1: Magnet disposal

DESCRIPTION

When the car is at terminal floor with short floor (TDC) input active, starts in Low speed if it has to stop to the next floor. Starts in High speed for all the other floors.

When the car is at floor near the terminal floor with short floor (TDC input active), starts in Low speed if it has to stop to the near terminal floor. Starts in High speed for all the other floors.

TERMS

USS - Up Stop Switch (Downward Slowdown)

DSS - Down Stop Switch (Upward Slowdown)

ULS - Top Floor Limit Switch

DLS - Bottom Floor Limit Switch

SFS – Short Floor Slowing down Switch **(NEW)**

A = 150mm

D = 20mm

R = 100mm

X1A = Reduce Upward Slowdown Space

X1 = Upward Slowdown Space

X2 = Upward Stop Space

X1B = Reduce downward Slowdown Space

Y1 = Downward Slowdown Space

Y2 = Downward Stop Space

RA = reduced slowing vane length, min. 20mm

AA, AB = reduced stop vane length, min 20mm, must be longer than X2, Y2 respectively.

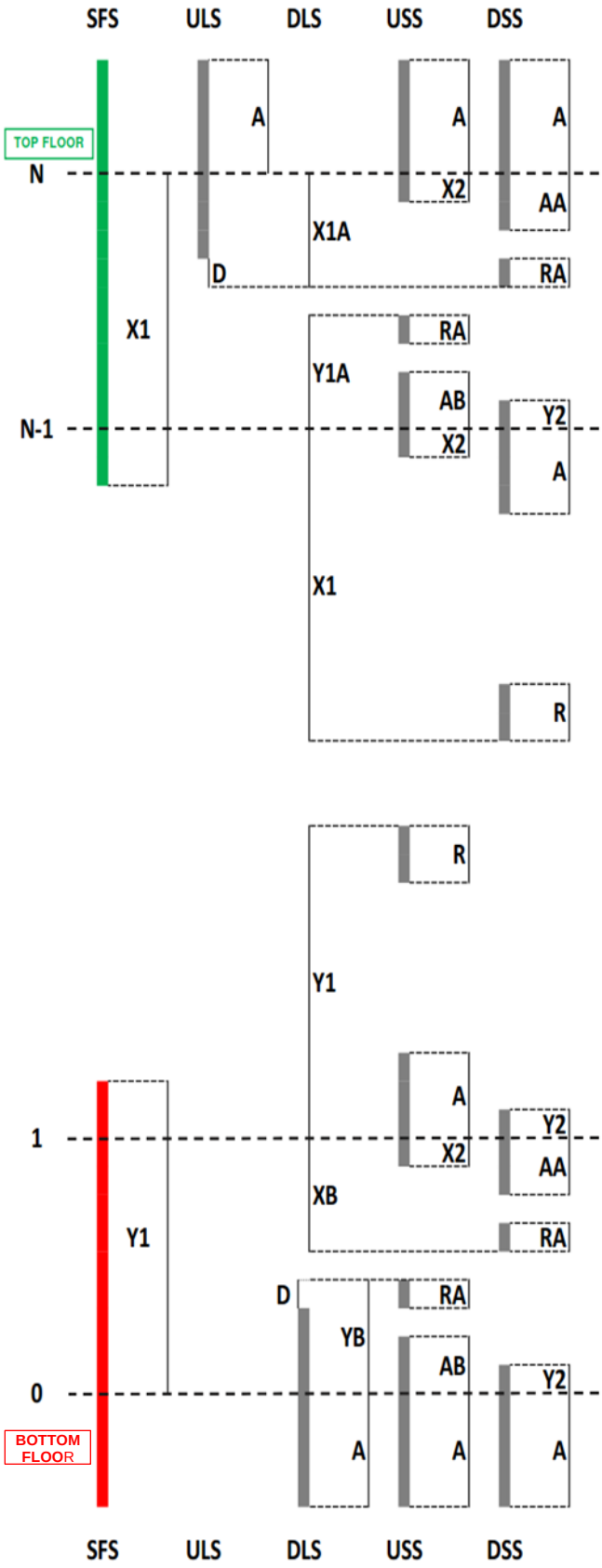

Figure 1: Magnet disposal

Figure 2: Modification example to an existing control panel

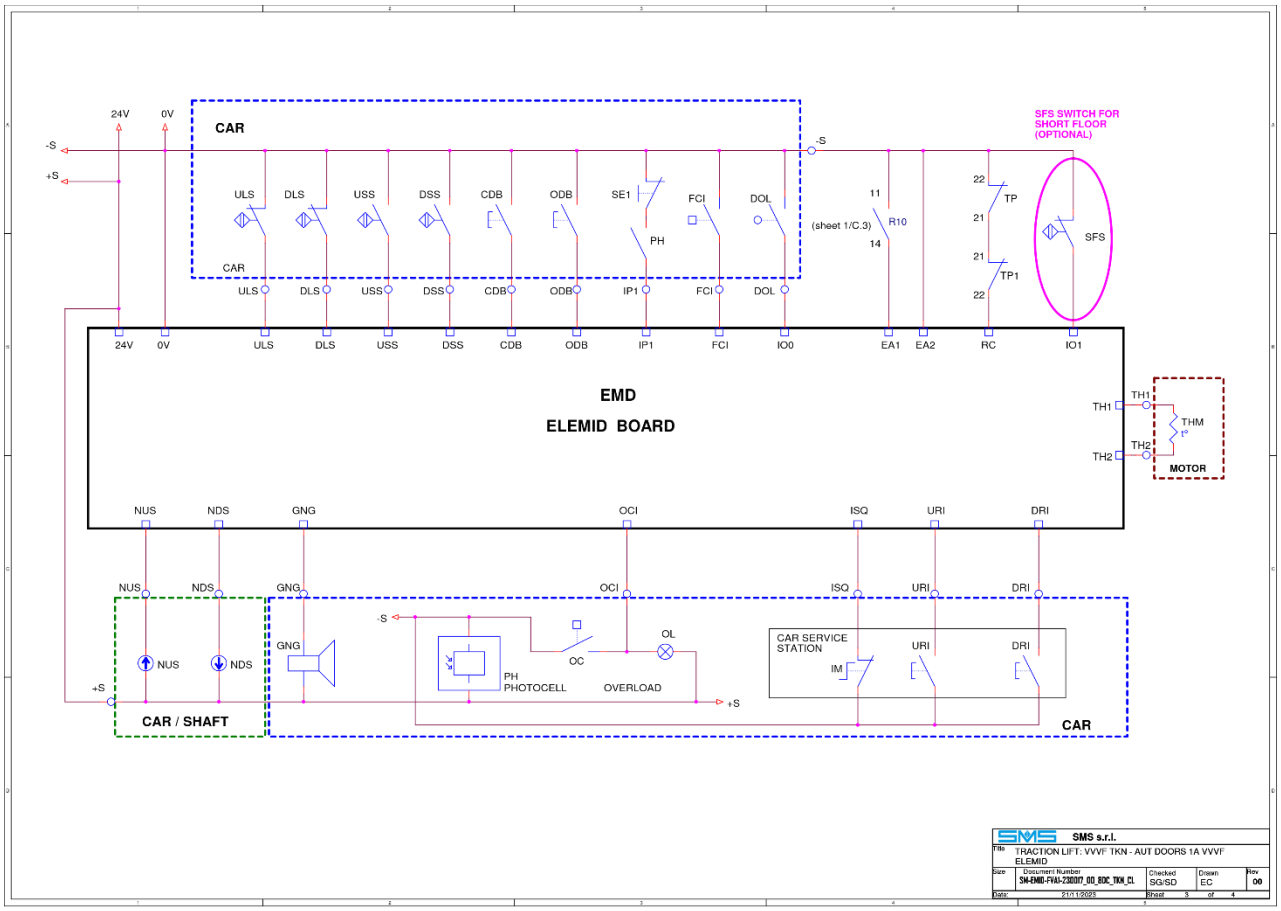

5.6 - Programmable Inputs / Outputs

ELEMID IOs located on **M7** connector and **LEV** and **EME** outputs on **M8** are programmable, each terminal can be programmed to execute a specific function in **Settings** menu (See **3.3.7 - Settings**).

NUS	Direction Up Signal (APB operation), Next Leaving Up Signal (Collective operation)
NDS	Direction Down Signal (APB operation), Next Leaving Down Signal (Collective operation)
GONG	Acoustic signal of car incoming
CAM	Retiring CAM output
SBY	Stand by output (see **5.5.6 - Stand by for energy saving**)
LEV	Releveling operation active
EME	Emergency operation active
STD	Star-delta output
OS	On service output
L13	Italian Law 13 Output
SS	Soft Stop output
DO	Door open signal (for advanced door opening)
BYO	Safety chain bypass active (EN81-20)
CAF	CAR on the door zone position
IAF	CAR is incoming at floor (Active for 500ms after slowing)
ALF	Signal for telephone dialer (Active when car is at floor with door open)
OS1	On service output mode 1 (Active when elevator can't be used from users)
EC	EC Occupied output
CAM1	Retiring CAM output mode 1*

TDC**	Contactor dropout delay input
DOL**	NC input, off when doors are completely open See **5.5.3 - Automatic Door Control**
VIC**	VIP Call input
EKF**	EKF input for EN81:72 See **3.2.9 - Fire-Fighter Operation EN81-72 / EN81-73**

** Settings reserved to I/O **IO0**, **IO1**, **IO2**, **IO3**

*Retiring CAM output mode 1 is used on semi-automatic doors, CAM block at car door closing, release at car door fully open.

5.7 - 7-Segments display management

ELEMID can manage a 7-Segments display without adding any ELEXP expansions. To enable this function it is necessary to set **F55** as “7-Segments”. This option is available only in two cases: ELEMID standalone (no extensions – **F51** =”No”) or serial car connection with a maximum of 12 stops in Down collective, APB or Home lift operation, with a maximum of 8 stops in Full collective operation (No ELEXP needed to expand calls).

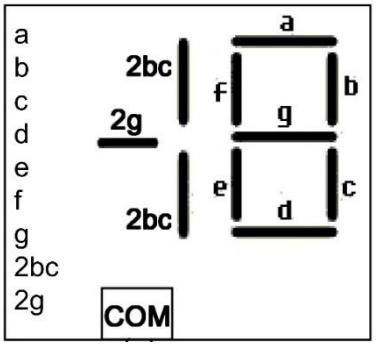

► Standalone

In case of standalone configuration, for Down collective and Full collective operations max number of stops is limited (Down Collective max stops = 7, Full Collective max stops=5). Moreover, in DC operation IO0, IO1 and IO2 are not programmable, in FC operation IO0 and IO1 are not programmable, in APB and HL operations “car position lamps” are not present because of the 7-Segments display.

STANDALONE			
Segment	Down collective (Max stops=7)	Full collective (Max stops=5)	APB/Home Lift
a	PB0	PB0	PB0
b	PB1	PB1	PB1
c	PB2	PB2	PB2
d	IO0	IO0	D2
e	IO1	IO1	D3
f	IO2	U4	D4
g	U7	D1	D5
‘-’ (2g)	D7	D7	D6
‘1’ (2bc)	x	x	x

► Serial car connection

In case of serial car connection, max number of stops is not affected by the 7-Segments display option, but in DC operation IO0 is not programmable, in FC operation IO0 and IO1 are not programmable. On the ELECB side, OPC, OPD, OPE and, if needed the ‘-’ segment (**F02** different from ‘0’), OPF are used as display segments.

SERIAL CAR CONNECTION				
Segment	Down collective	Full collective	APB/HL	**ELECB**
a	PB0	PB0	PB0	CB0
b	PB1	PB1	PB1	CB1
c	PB2	PB2	PB2	CB2
d	GNG	GNG	GNG	CB3
e	D4	D0	D4	CB4
f	D5	U7	D5	OPC
g	D6	IO0	D6	OPD
‘-’	D7	IO1	D7	OPF
‘1’	IO0	x	IO0	OPE

6 - ADVANCED FUNCTIONS

6.1 - Multiplex Operation

No other additional board are needed for pairing lift systems to work in **Multiplex** operation (up to four).

To connect the landing calls, please refer to the tables (see **4 - Board Configurations**) in this Manual, depending on the configuration and the stop number, considering that the **all landing calls shall be parallel connected** to all the lifts in the group.

In multiplex operation landing calls push buttons must work even if it one of the lift in the group is disabled for maintenance. To achieve this behaviour:

- connect the landing call button common to all **0V** of ELEMID boards.
- connect the registered signal common to all **24E** of ELEMID and ELEXP boards.

On every ELEMID set also **F39**, **F40** and **F41** and **F43** according to the specific installation (see **8.3 - Functions**).

While **F39** sets the total number of lifts, **F40** specifies for every ELEMID an unique master address, so program a different value for every lift, 0 for the first, 1 for the second,...

Also program every expansion board dipswitch (ELECB and ELEXP) according to **F40**, as specified in **8.6.2 - Board Address**.

F41 function set the behaviour for high traffic lifts; when some calls are not served for a certain time set by this parameter, the internal algorithm enables high priority for this call group.

F43 function consider the possibility that one of the lifts serves one call less than the others.

Set this lift **F43** to **Bottom Floor** if this floor is at the bottom, and **F43** to **Other car Bottom** in every other lift.

If the missing floor is the top one, set **F43** to **Top Floor** in this particular lift and **F43** to **Other car Top** in every other.

6.1.1 - Example of Connections for Triplex Operation

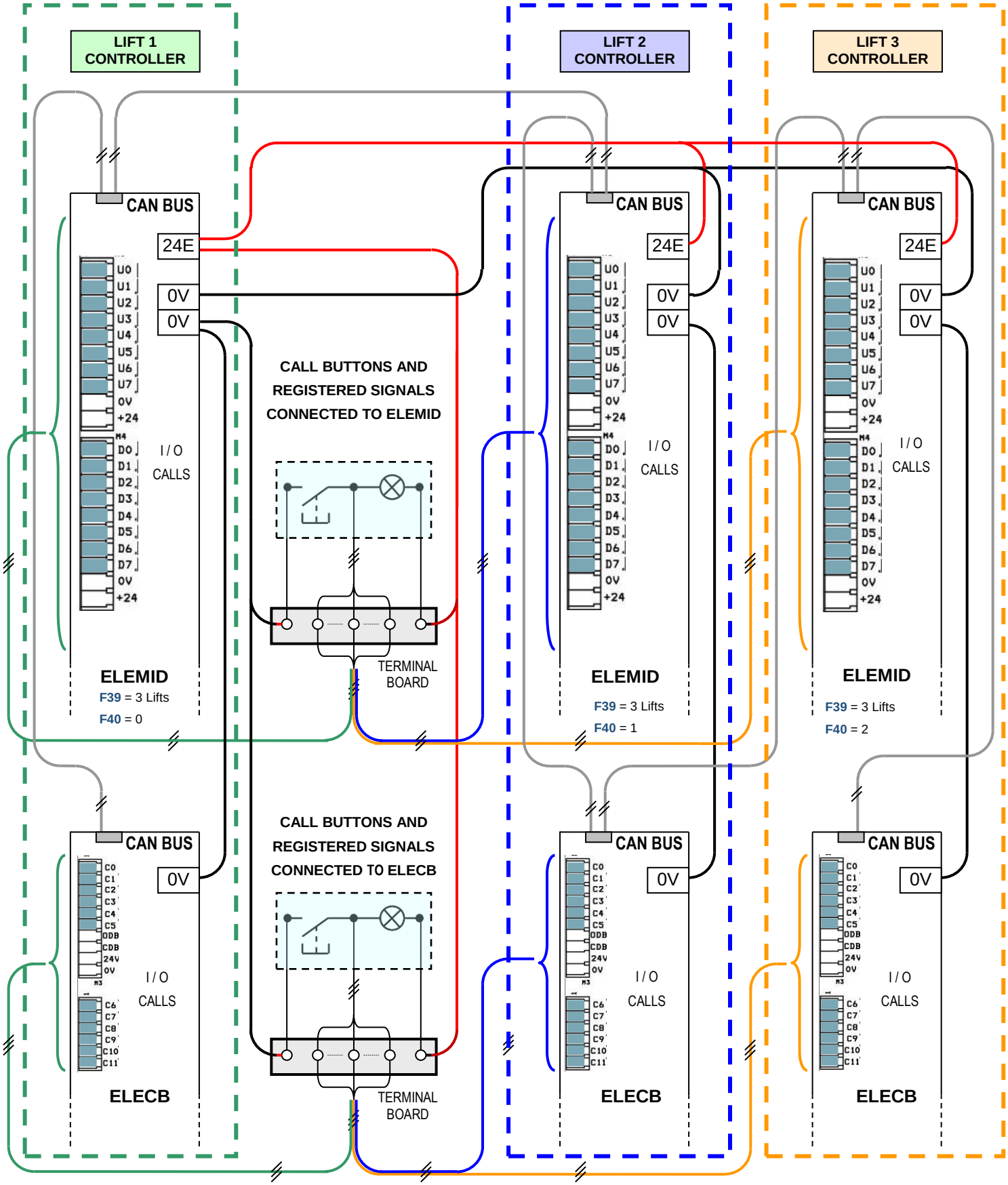

6.2 - Selective Door Opening

With Selective Door Opening for two entrances cars, at one floor two possible stops are possible, one from one side, and one from another, completely independent one from the other: it means that separate calls and commands can be recorded for that floor, which make the doors to open on side 1 or on side 2, but never simultaneously.

This mode of operation is **supported only in Serial Car connection**, with ELECB board (set **F51** to **Car & Calls**).

Selective opening can be programmed for one or more floors, by setting **F07** to 2, and **F08** to selective (see **5.5.3 - Automatic Door Control** and **8.3 - Functions**).

In order to consider what configuration of ELEMID, ELECB and ELEXP boards is required, the total number of buttons has to be considered, namely **the number of services**, and **not the number of floors** served, considering that **there are two services for every selective opening floor**.

See **4.2 - Serial Car Connection** to choose the configuration for the desired number of services.

Landing and Car Calls are placed differently with Selective Door Opening: connect non selective calls and selective calls side 1 normally, with the same logic reported in the tables, instead **connect selective calls side 2 starting from the last terminal** for that configuration, and then **backwards**; to clarify the placement logic, in the next pages examples of some configurations are shown.

6.2.1 - APB Operation

For the APB Operation the maximum number of stops is 8, so this means that if every floor needs selective opening (2 services), a maximum of 4 floors with a total 8 services is supported.

Connect to ELEMID non selective and selective landing calls for side 1, starting from forward; connect instead side 2 selective landing calls from U7 backward, connecting the button at the lowest floor to U7.

Connect to ELECB non selective and selective Car Calls for side 1, starting from C0 forward; connect instead side 2 selective Car Calls from C11 backward, connecting the button for the lowest floor to C11.

► EXAMPLE 1

Lift with 6 stops, 2 car entrances, SELECTIVE OPENING on floors 2 and 4, No. OF SERVICES = 8.

Service Number	Landing Call Terminal	Car Call Terminal	Floor	Side
0	U0 - ELEMID	C0 - ELECB	0	Side 1
1	U1 - ELEMID	C1 - ELECB	1	Side 2
2	U2 - ELEMID	C2 - ELECB	2	Side 1
3	U3 - ELEMID	C3 - ELECB	3	Side 1
4	U4 - ELEMID	C4 - ELECB	4	Side 1
5	U5 - ELEMID	C5 - ELECB	5	Side 2
6	U6 - ELEMID	C10 - ELECB	4	Side 2
7	U7 - ELEMID	C11 - ELECB	2	Side 2

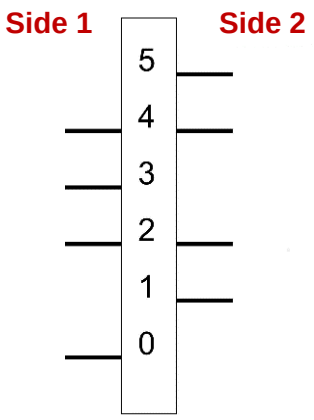

Program functions **F08.01** and **F08.05** as **Side 2**, **F08.02** and **F08.04** as **Selective**, other **F08.n** as **Side1**.

6.2.2 - Special APB operation (APB SX).

This operation is working as APB operation for landing calls and down collective operation for Car calls.
The maximum number of stops for this special ABP operation is the same as per Down collective operation.
Use the same tables for down collective operations to determine the number of stops and connections.
To have this feature, parameter **F03** must be programmed as A.P.B SX, parameter **F26** is used as occupied time instead of **F27**.

6.2.3 - Collective operations

For Collective operations (Down or Full), in case of floor with selective opening, landing calls can be registered both from side 1 and side 2 (or car calls); in such cases, on stopping, the door on the side where the first call was registered opens, after the starting time door closes, and once the doors are closed the opening of the other door is commanded.

6.2.4 - Down Collective

There is only one button at the floor and different configurations can be made; to determine what board configuration is needed, keep in consideration the total number of services and use the tables for Down Collective operation with Serial Car Connection (see tables at **4.2 - Serial Car Connection**).

In the following paragraphs, some possible configurations are shown as an example.

ELEMID + ELECB, Maximum number of SERVICES = 12

Connect to ELEMID non selective and selective Landing Calls for side 1, starting from U0 forward; connect instead side 2 selective Landing Calls from 2 from D3 backward, connecting the button at the lowest floor to D3.

Connect to ELECB non selective and selective Car Calls for side 1, starting from C0 forward; connect instead side 2 selective Car Calls from C11 backward, connecting the button for the lowest floor to C11.

► EXAMPLE 2

Lift with 5 stops, 2 car entrances, SELECTIVE OPENING on floors 1, 2 and 3, No. OF SERVICES =8.

Service Number	Landing Call Terminal	Car Call Terminal	Floor	Side
0	U0 - ELEMID	C0 - ELECB	0	Side 1
1	U1 - ELEMID	C1 - ELECB	1	Side 1
2	U2 - ELEMID	C2 - ELECB	2	Side 1
3	U3 - ELEMID	C3 - ELECB	3	Side 1
4	U4 - ELEMID	C4 - ELECB	4	Side 2
5	D1 - ELEMID	C5 - ELECB	3	Side 2
6	D2 - ELEMID	C10 - ELECB	2	Side 2
7	D3 - ELEMID	C11 - ELECB	1	Side 2

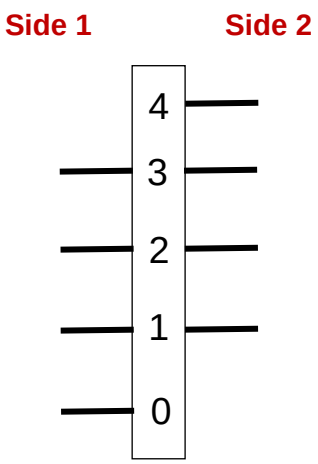

Program functions **F08.04** as **Side 2**, **F08.01** to **F08.03** as **Selective**, other **F08.n** as **Side 1**.

ELEMID + ELECB + 2 ELEXP, Maximum number of SERVICES = 24

Connect to ELEMID non selective and selective Landing Calls for side 1 starting from U0 forward; connect instead side 2 selective Landing Calls from C07 of ELEXP (address=2) backward, connecting the button at the lowest floor to C07.

Connect non selective and selective Car Calls for side 1, starting from C0 of ELECB (address=0) forward; connect instead side 2 selective Car Calls from C11 of ELEXP (address=1) backward, connecting the button for the lowest floor to C11.

► EXAMPLE 3

Lift with 8 stops, 2 car entrances, SELECTIVE OPENING on floors 1-6, No. OF SERVICES = 14.

Service Number	Landing Call Terminal	Car Call Terminal	Floor	Side
0	U0 - ELEMID	C0 - ELECB (0)	0	Side 1
1	U1 - ELEMID	C1 - ELECB (0)	1	Side 1
2	U2 - ELEMID	C2 - ELECB (0)	2	Side 1
3	U3 - ELEMID	C3 - ELECB (0)	3	Side 1
4	U4 - ELEMID	C4 - ELECB (0)	4	Side 1
5	05 - ELEMID	C5 - ELECB (0)	5	Side 1
6	U6 - ELEMID	C6 - ELECB (0)	6	Side 1
7	U7 - ELEMID	C7 - ELECB (0)	7	Side 1
x	D0 - ELEMID	C8 - ELECB (0)	x	x
x	D1 - ELEMID	C9 - ELECB (0)	x	x
x	D2 - ELEMID	C10 - ELECB (0)	x	x
x	D3 - ELEMID	C11 - ELECB (0)	x	x
x	D4 - ELEMID	C00 - ELEXP (1)	x	x
x	D5 - ELEMID	C01 - ELEXP (1)	x	x
x	D6 - ELEMID	C02 - ELEXP (1)	x	x
x	D7 - ELEMID	C03 - ELEXP (1)	x	x
x	C00 - ELEXP (2)	C04 - ELEXP (1)	x	x
x	C01 - ELEXP (2)	C05 - ELEXP (1)	x	x
8	C02 - ELEXP (2)	C06 - ELEXP (1)	6	Side 2
9	C03 - ELEXP (2)	C07 - ELEXP (1)	5	Side 2
10	C04 - ELEXP (2)	C08 - ELEXP (1)	4	Side 2
11	C05 - ELEXP (2)	C09 - ELEXP (1)	3	Side 2
12	C06 - ELEXP (2)	C10 - ELEXP (1)	2	Side 2
13	C07 - ELEXP (2)	C11 - ELEXP (1)	1	Side 2

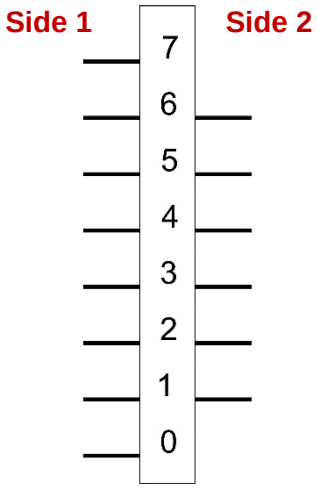

Program functions from **F08.01** to **F08.06** as **Selective**, other **F08.n** as **Side 1**.

6.2.5 - Full Collective

There are 2 buttons for each floor and different configurations can be made; to determine what board configuration is needed, keep in consideration the total number of services and use the tables for Full Collective operation with Serial Car Connection, see **4.2 - Serial Car Connection** . In the following paragraphs, a possible configuration is shown as an example.

ELEMID + ELECB + 2 ELEXP, Maximum number of SERVICES = 15

Connect to ELEMID non selective and selective Landing Calls for side 1, starting from U0 forward; connect instead side 2 selective Up Landing Calls from C05 of ELEXP (address=2) backward, connecting the button at the lowest floor to C05.

Connect to ELEMID non selective and selective Down Landing Calls for side 1, starting from D0 forward; connect instead side 2 selective Down Landing Calls from C11 of ELEXP (address=2) backward, connecting the button at the lowest floor to C11.

Connect non selective and selective Car Calls for side 1, starting from C0 of ELECB (address=0) forward; connect instead side 2 selective Car Calls from C02 of ELEXP (address=1) backward, connecting the button for the lowest floor to C02.

► EXAMPLE 4

Lift with 8 stops, 2 car entrances, SELECTIVE OPENING on floors 1-6, No. OF SERVICES = 14.

Service Number	Landing Call Up Terminal	Landing Call Down Terminal	Car Call Terminal	Floor	Side
0	U0 - ELEMID	x	C0 - ELECB (0)	0	Side 1
1	U1 - ELEMID	D0 - ELEMID	C1 - ELECB (0)	1	Side 1
2	U2 - ELEMID	D1 - ELEMID	C2 - ELECB (0)	2	Side 1
3	U3 - ELEMID	D2 - ELEMID	C3 - ELECB (0)	3	Side 1
4	U4 - ELEMID	D3 - ELEMID	C4 - ELECB (0)	4	Side 1
5	U5 - ELEMID	D4 - ELEMID	C5 - ELECB (0)	5	Side 1
6	U6 - ELEMID	D5 - ELEMID	C6 - ELECB (0)	6	Side 1
7	x	D6 - ELEMID	C7 - ELECB (0)	7	Side 1
8	C00 - ELEXP (2)	C06 - ELEXP (2)	C9 - ELECB (0)	6	Side 2
9	C01 - ELEXP (2)	C07 - ELEXP (2)	C10 - ELECB (0)	5	Side 2
10	C02 - ELEXP (2)	C08 - ELEXP (2)	C11 - ELECB (0)	4	Side 2
11	C03 - ELEXP (2)	C09 - ELEXP (2)	C00 - ELEXP (1)	3	Side 2
12	C04 - ELEXP (2)	C10 - ELEXP (2)	C01 - ELEXP (1)	2	Side 2
13	C05 - ELEXP (2)	C11 - ELEXP (2)	C02 - ELEXP (1)	1	Side 2

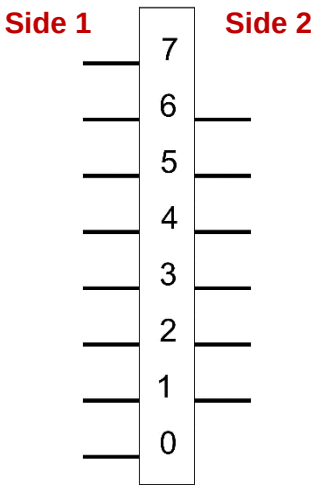

Program functions from **F08.01** to **F08.06** as **Selective**, other **F08.n** as **Side 1**.

ELEMID + ELECB + 6 ELEXP, Maximum number of SERVICES = 32

Connect to ELEMID non selective and selective Up Landing Calls for side 1, starting from U0 forward; connect instead side 2 selective Up Landing Calls from C10 of ELEXP (address=4) backward, connecting the button at the lowest floor to C10.

Connect to ELEMID non selective and selective Down Landing Calls for side 1, starting from D1 forward; connect instead side 2 selective Down Landing Calls from C11 of ELEXP (address=6) backward, connecting the button at the lowest floor to C11.

Connect non selective and selective Car Calls for side 1, starting from C0 of ELECB (address=0) forward; connect instead side 2 selective Car Calls from C07 of ELEXP (address=2) backward, connecting the button for the lowest floor to C07.

► EXAMPLE 5

Lift with 16 stops, 2 car entrances, SELECTIVE OPENING on floors 1-4,6,7,9-14 No. OF SERVICES = 28.

Service Number	Landing Call Up Terminal	Landing Call Down Terminal	Car Call Terminal	Floor	Side
0	U0 - ELEMID	x	C0 - ELECB (0)	0	Side 1
1	U1 - ELEMID	D1 - ELEMID	C1 - ELECB (0)	1	Side 1
2	U2 - ELEMID	D2 - ELEMID	C2 - ELECB (0)	2	Side 1
3	U3 - ELEMID	D3 - ELEMID	C3 - ELECB (0)	3	Side 1
4	U4 - ELEMID	D4 - ELEMID	C4 - ELECB (0)	4	Side 1
5	U5 - ELEMID	D5 - ELEMID	C5 - ELECB (0)	5	Side 2
6	U6 - ELEMID	D6 - ELEMID	C6 - ELECB (0)	6	Side 1
7	U7 - ELEMID	D7 - ELEMID	C7 - ELECB (0)	7	Side 1
8	C00 - ELEXP (3)	C00 - ELEXP (5)	C8 - ELECB (0)	8	Side 1
9	C01 - ELEXP (3)	C01 - ELEXP (5)	C9 - ELECB (0)	9	Side 1
10	C02 - ELEXP (3)	C02 - ELEXP (5)	C10 - ELECB (0)	10	Side 1
11	C03 - ELEXP (3)	C03 - ELEXP (5)	C11 - ELECB (0)	11	Side 1
12	C04 - ELEXP (3)	C04 - ELEXP (5)	C00 - ELEXP (1)	12	Side 1
13	C05 - ELEXP (3)	C05 - ELEXP (5)	C01 - ELEXP (1)	13	Side 1
14	C06 - ELEXP (3)	C06 - ELEXP (5)	C02 - ELEXP (1)	14	Side 1
15	x	C07 - ELEXP (5)	C03 - ELEXP (1)	15	Side 1
16	C11 - ELEXP (3)	C00 - ELEXP (6)	C08 - ELEXP (1)	14	Side 2
17	C00 - ELEXP (4)	C01 - ELEXP (6)	C09 - ELEXP (1)	13	Side 2
18	C01 - ELEXP (4)	C02 - ELEXP (6)	C10 - ELEXP (1)	12	Side 2
19	C02 - ELEXP (4)	C03 - ELEXP (6)	C11 - ELEXP (1)	11	Side 2
20	C03 - ELEXP (4)	C04 - ELEXP (6)	C00 - ELEXP (2)	10	Side 2
21	C04 - ELEXP (4)	C05 - ELEXP (6)	C01 - ELEXP (2)	9	Side 2
22	C05 - ELEXP (4)	C06 - ELEXP (6)	C02 - ELEXP (2)	7	Side 2
23	C06 - ELEXP (4)	C07 - ELEXP (6)	C03 - ELEXP (2)	6	Side 2
24	C07 - ELEXP (4)	C08 - ELEXP (6)	C04 - ELEXP (2)	4	Side 2
25	C08 - ELEXP (4)	C09 - ELEXP (6)	C05 - ELEXP (2)	3	Side 2
26	C09 - ELEXP (4)	C10 - ELEXP (6)	C06 - ELEXP (2)	2	Side 2
27	C10 - ELEXP (4)	C11 - ELEXP (6)	C07 - ELEXP (2)	1	Side 2

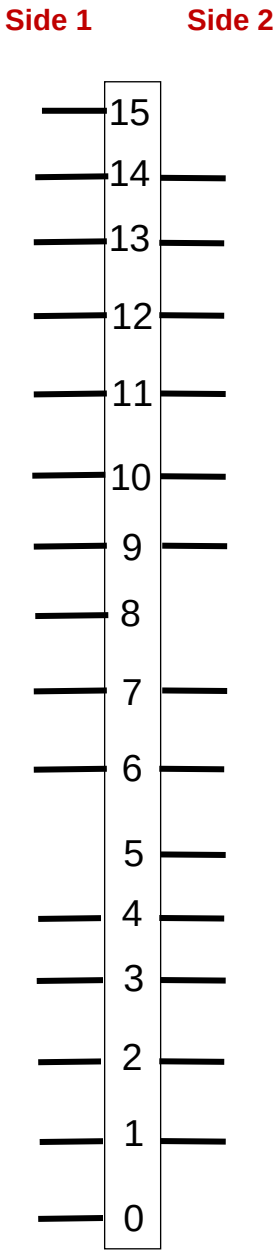

Program functions from **F08.01** to **F08.04**, from **F08.06** to **F08.07**, from **F08.09** to **F08.14** as **Selective**, **F08.05** as **Side 2**, other **F08.n** as **Side 1**.

6.3 - ELEXP As Display Driver

ELEXP can be used as a display driver on both Serial or Parallel Car connection.

This can be achieved by setting jumpers **JP3** on **A** and **JP4** on **B** on ELEXP and set function **F53** on ELEMID, according to the function desired.

6.3.1 - ELEXP as Decoder for 7 Segments Display

The ELEXP Board provides 9 outputs to control a 7 segment display, consisting of 2 digits and the minus sign for negative numbers. The tens digit can assume only the 1 value (max. number 19).

ELEXP can manage both **Positive Common** displays and **Negative Common** displays.

F53 (ELEMID) =	**7 SEG** or **7 SEG X 2** If it is set **7 SEG X 2**, it is enabled an other ELEXP board with the same function, to control both the display in the car and the one at main floor. ELEXP(0) : SW2-1 = OFF SW2-2 = OFF ELEXP(1): SW2-1 = ON SW2-2 = OFF
SW1 (n° 10 Switches) =	All **OFF**

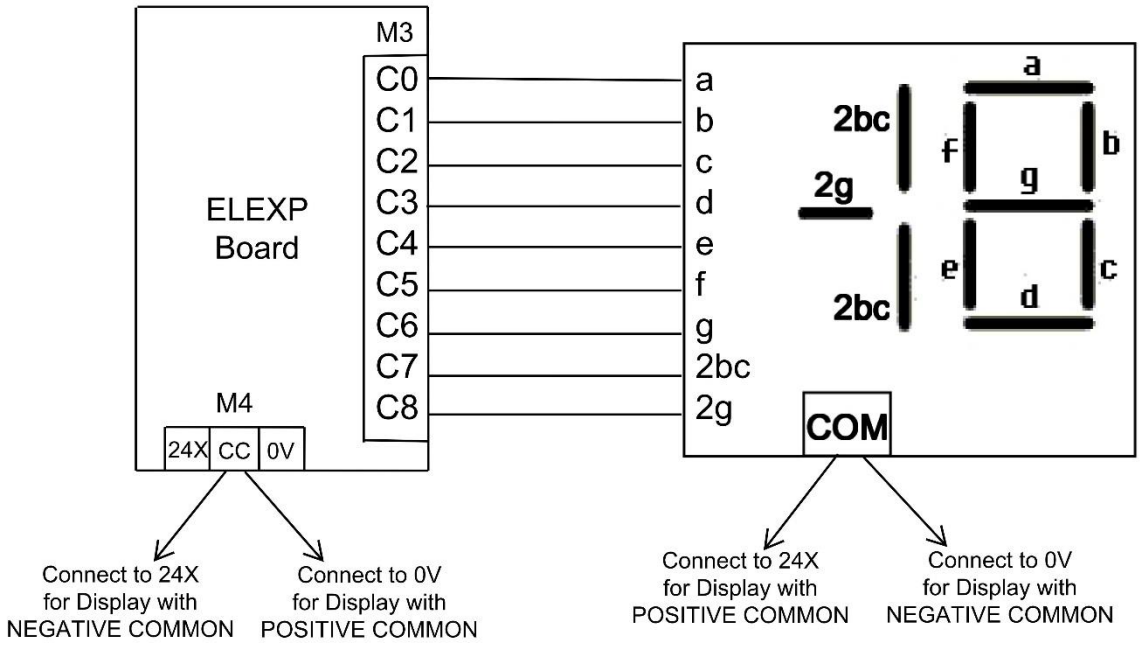

6.3.2 - ELEXP As Decoder for 1 Input Per Floor Display

The ELEXP Board provides 12 outputs to control a display with 1 Input per floor, and **Negative or Positive Common.**

In the same way, it's possible to control car position signals by lamps.

SETTINGS:

F53 (ELEMID) =	**1 OUT * FLOOR** In this case the number of boards enabled depend on top floor number **F01**. If **F01** ≤ 11 one board, else if **F01** ≤ 23 two boards, else if **F01** > 23 three boards. ELEXP(0): SW2-1 = OFF SW2-2 = OFF ELEXP(1): SW2-1 = ON SW2-2 = OFF ELEXP(2): SW2-1 = OFF SW2-2 = ON
SW1 (n° 10 Switches) =	All **OFF**

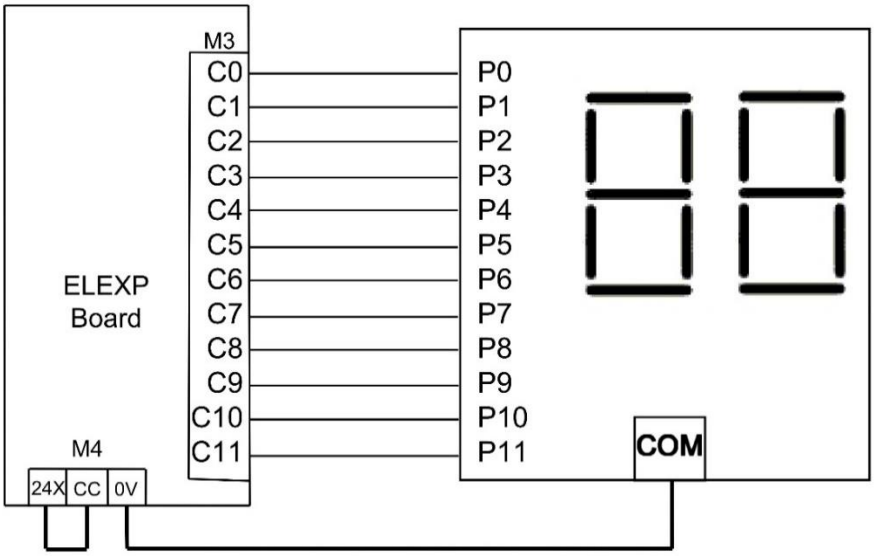

If display common, connected to positive, only outputs C0….C9 should be used.

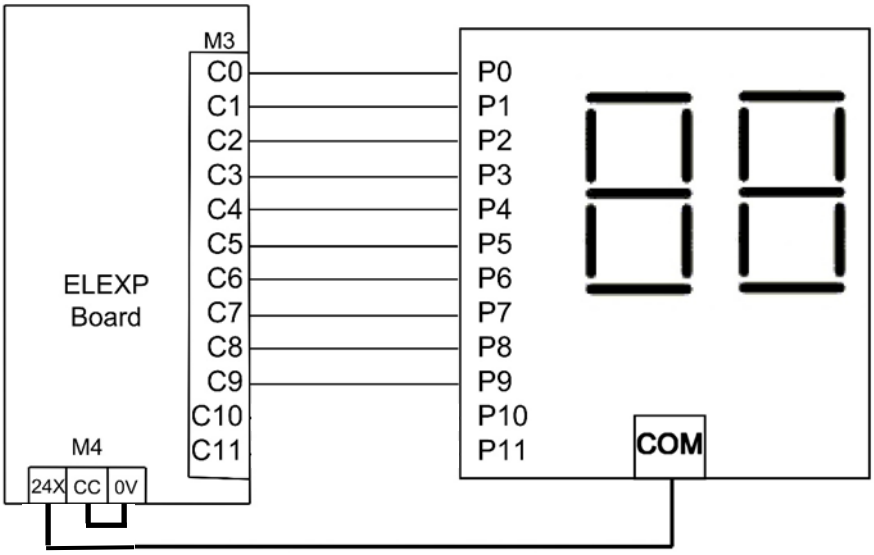

7 - EXAMPLES

In this chapter are given a few examples of diagrams.

The connections of the safety chain and contactors must comply exactly the ones shown in the drawings, supply voltage can be changed, provided that it is compatible with the Electrical Specifications (see **8.4 - Electrical Specification**)

EXAMPLE 1: ELEMID board without expansions, 3 phase car motor driven by VVVF, door motor operator type VVVF, DC operating voltage. Of course, other solutions are possible.

7.1 - APPLICATION EXAMPLE 1

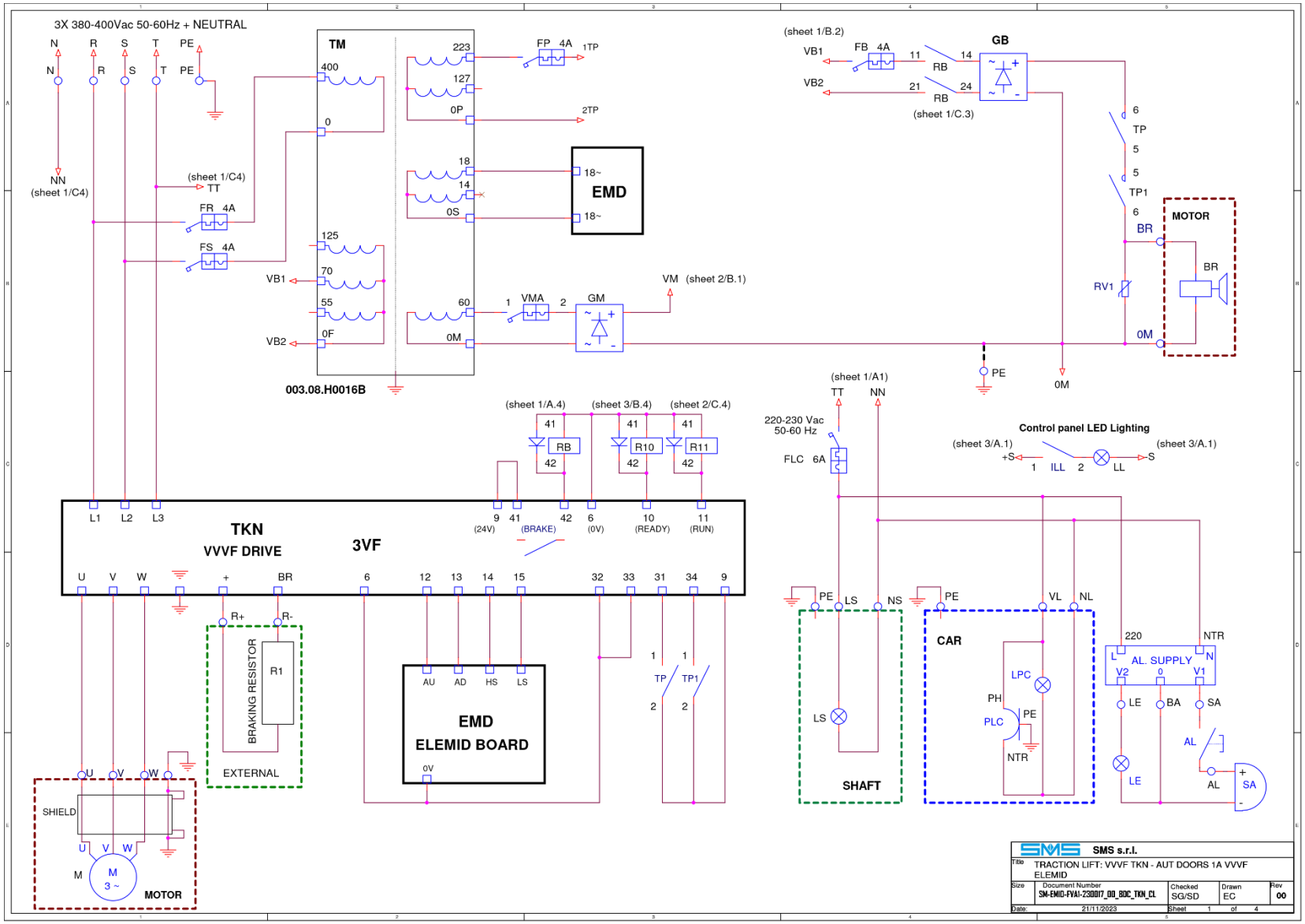

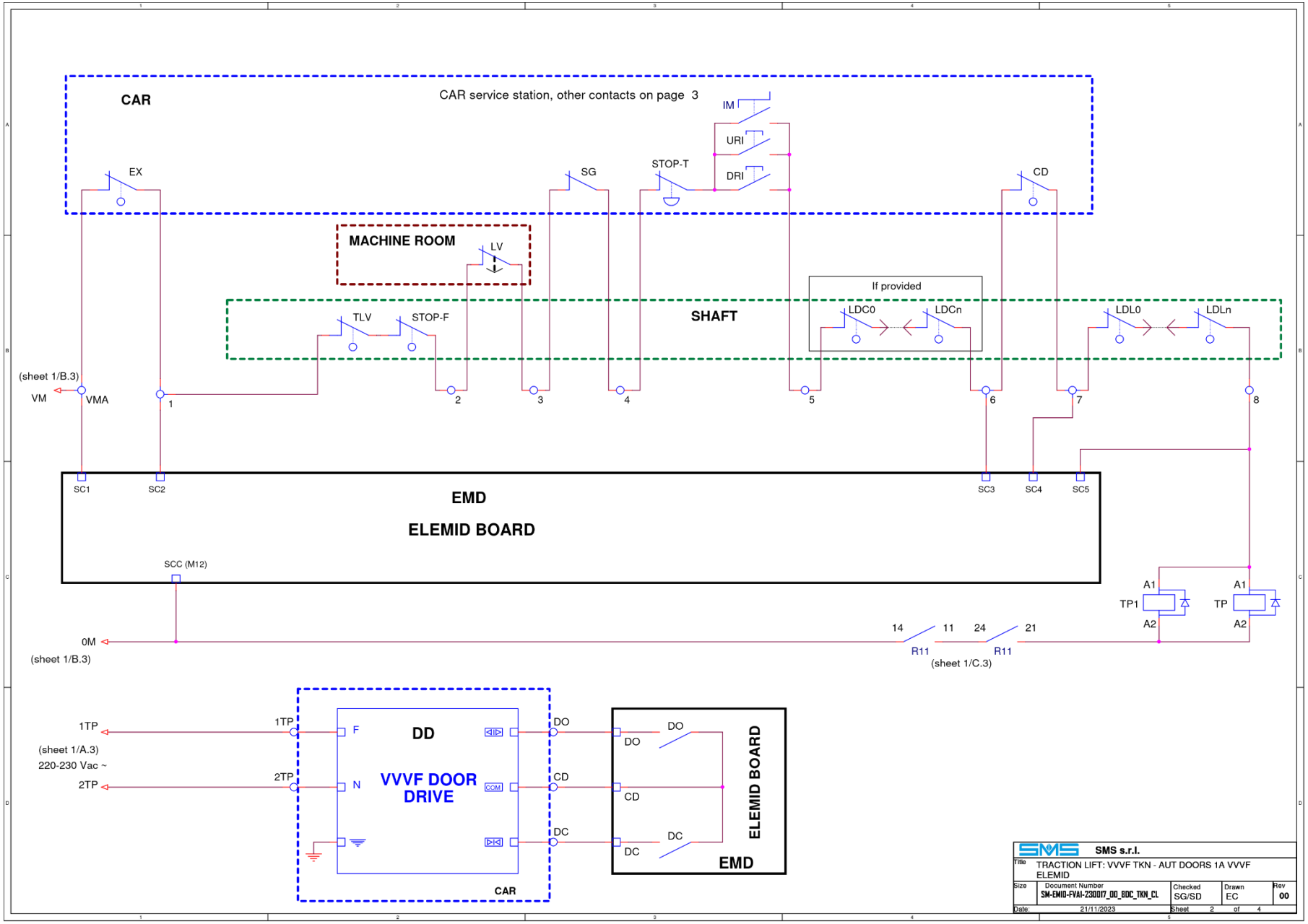
CAR
CAR service station, other contacts on page 3
IM
URI
DRI
STOP-T
SG
EX
CD
MACHINE ROOM
LV
If provided
SHAFT
TLV
STOP-F
LDC0
LDCn
LDL0
LDLn
(sheet 1/B.3)
VM
VMA
1
2
3
4
5
6
7
8
SC1
SC2
SC3
SC4
SC5
EMD
ELEMID BOARD
SCC (M12)
A1
A2
TP1
TP
0M
(sheet 1/B.3)
14
11
24
21
R11
R11
(sheet 1/C.3)
1TP
(sheet 1/A.3)
220-230 Vac ~
2TP
1TP
2TP
F
N
DD
VVVF DOOR DRIVE
COM
DO
CD
DC
DO
CD
DC
ELEMID BOARD
EMD
CAR
SMS s.r.l.
Title
TRACTION LIFT: VVVF TKN - AUT DOORS 1A VVVF ELEMID
Size
Document Number
SM-EMID-FVAI-230017_00_BDC_TKN_CL
Checked
SG/SD
Drawn
EC
Rev
00
Date:
21/11/2023
Sheet 2 of 4

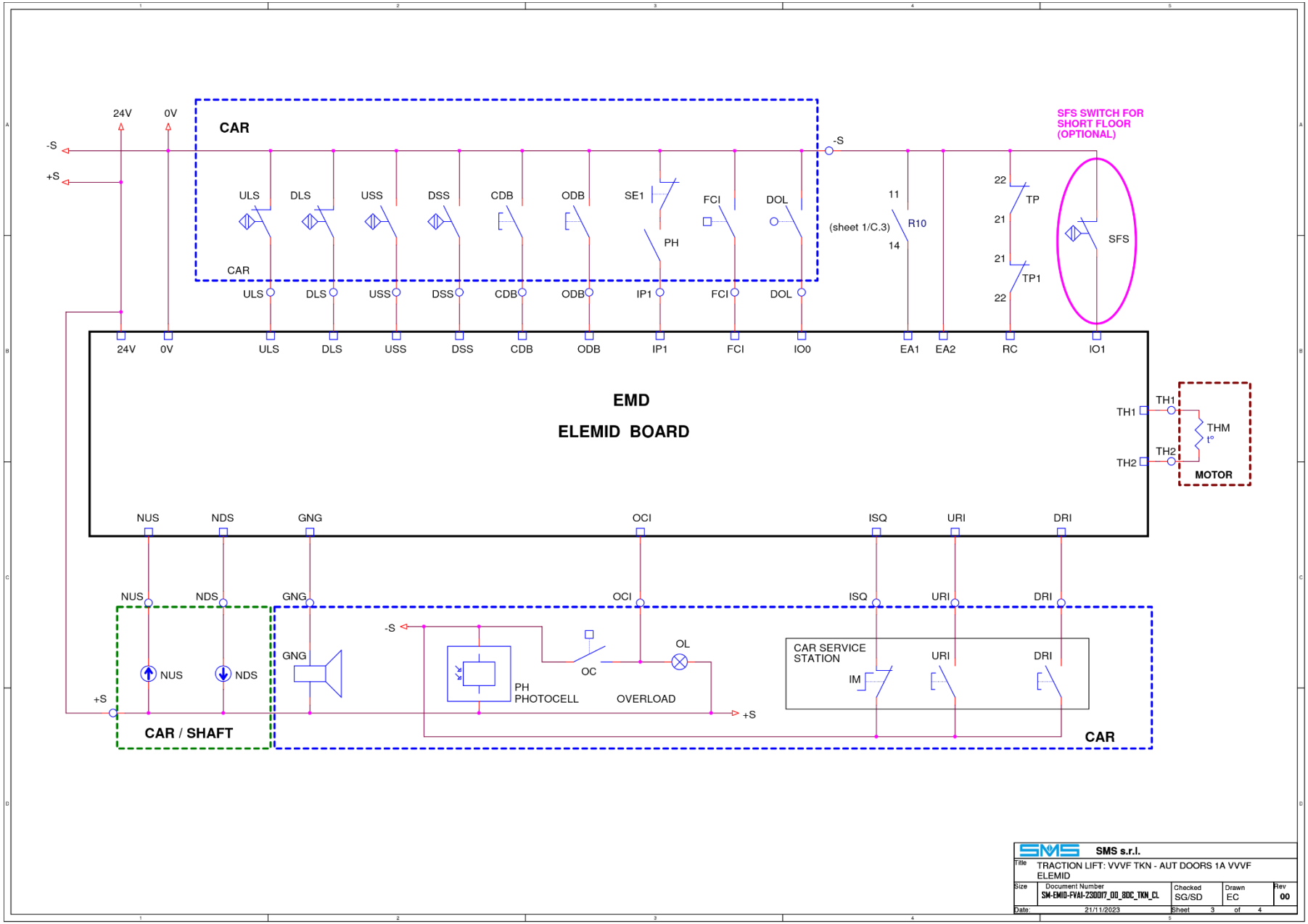
CAR
24V
0V
-S
+S
ULS
DLS
USS
DSS
CDB
ODB
SE1
PH
FCI
DOL
IP1
IO0
IO1
EA1
EA2
RC
11
14
R10
(sheet 1/C.3)
22
21
TP
TP1
SFS
SFS SWITCH FOR SHORT FLOOR (OPTIONAL)
EMD
ELEMID BOARD
TH1
TH2
THM
t°
MOTOR
NUS
NDS
GNG
OCI
ISQ
URI
DRI
OC
OL
PH PHOTOCELL
OVERLOAD
CAR SERVICE STATION
IM
CAR / SHAFT
CAR
SMS s.r.l.
Title
TRACTION LIFT: VVVF TKN - AUT DOORS 1A VVVF ELEMID
Size
Document Number
SM-EMID-FVAI-23D017_00_8DC_TKN_CL
Checked
SG/SD
Drawn
EC
Rev
00
Date:
21/11/2023
Sheet 3 of 4

DOWN COLLECTIVE Stand alone CONFIGURATION (max. 8 stops)
SEE USER MANUAL FOR OTHER CONFIGURATIONS

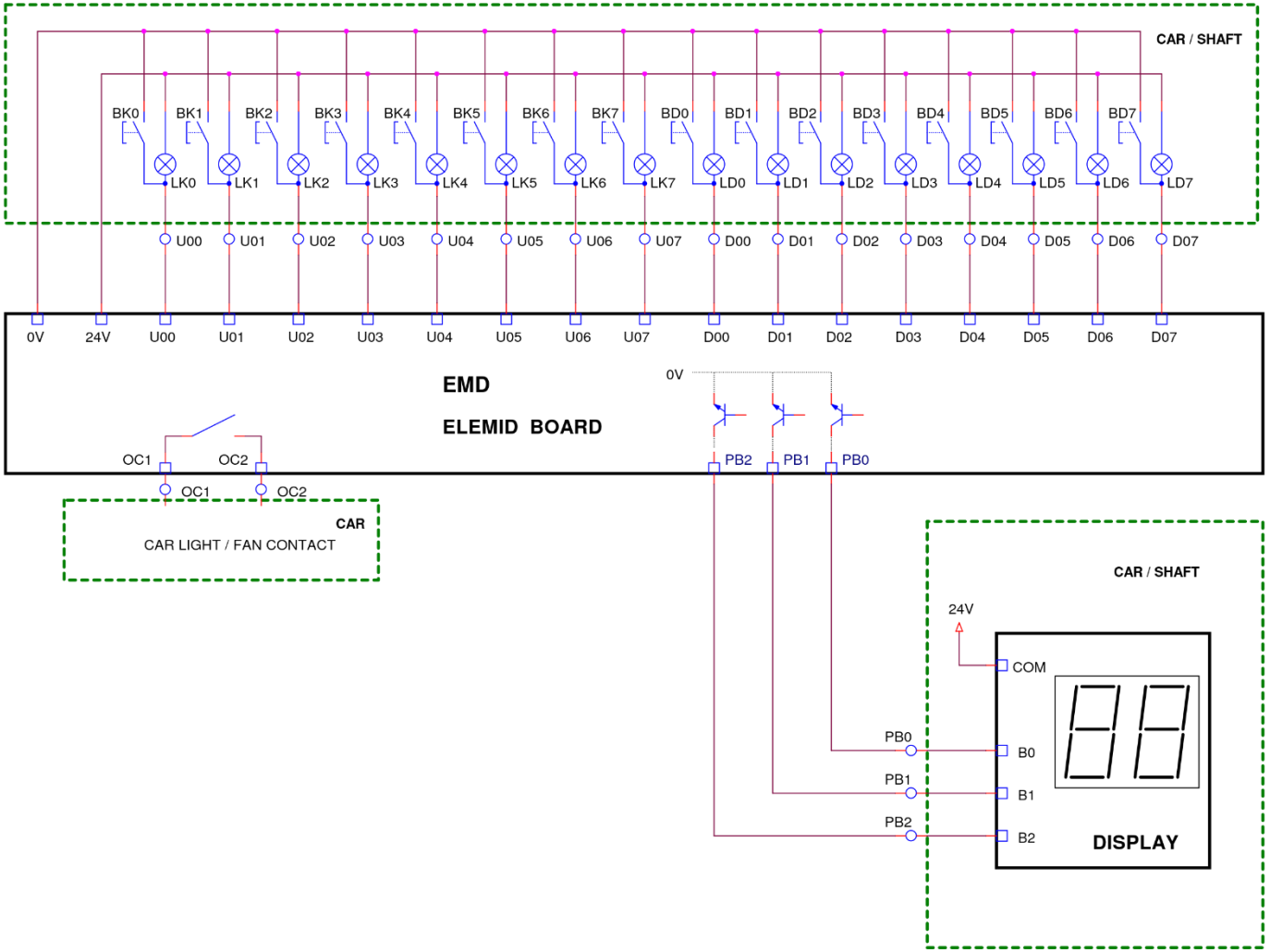

SMS s.r.l.				
Title	TRACTION LIFT: VVVF TKN - AUT DOORS 1A VVVF ELEMID			
Size	Document Number SM-EMID-FVAI-230017_00_BDC_TKN_CL	Checked SG/SD	Drawn EC	Rev 00
Date: 21/11/2023		Sheet 4 of 4		

8 - APPENDIX

8.1 - Warning messages

Message	Condition	Space for notes
ULS&DLS Active	Both UP (ULS) and DOWN (DLS) limit switch active	ULS and DLS are N.C. contacts. Switch active means contact open.
ULS Active	**Normal mode:** Car not at top floor but ULS active. **Inspection mode:** URI pressed with ULS active.	
DLS Active	**Normal mode:** Car not at bottom floor but DLS active. **Inspection mode:** DRI pressed with DLS active.	
ULS Not Active	Car at top floor but ULS not active	
DLS Not Active	Car at bottom floor but DLS not active	
Photocell Dark	Photocell dark from more than 20 seconds doesn't allow door close	
Door Open Button	Door open button doesn't allow door close	
Car Overload	Car overload doesn't allow car movement	
Contactors	RC input active without run command (UP or DOWN)	
Door Open Limit	Door open limit open doesn't allow door open activation	
Car Doors	Door open or close failed	
Landing Locks	Door locking failed	
CAN Extens.	Missing CAN communication with expansion boards	
Ext. Trip 2	Input EA2 open	

8.2 - Alarm Codes

E	ALARM	DESCRIPTION	CONSEQUENCES
E02	LANDING DOOR LOCKING FAILURE	Upon leaving, with the doors fully closed (input **SC4** active), the input **SC5** is not activated within 5 seconds. The description of the alarm reports the floor number in which the alarm triggered	APB OPERATION The call is canceled, the doors will reopen and the car is waiting for a new call. COLLECTIVE OPERATION The car and landing calls remain recorded and 5 attempts will be performed: if the problem persists, all calls are cancelled and the car remains in service, waiting for new calls. MULTIPLEX OPERATION The calls are not cancelled but are transferred to the other cars.
E03	MAIN CONTACTORS ACTIVATION FAILURE	Upon leaving, with locked doors (input **SC5** active), input **RC** is not activated within 2 seconds. The description of the alarm reports the floor number in which the alarm triggered	
E05	CAR MOVING FAILURE	Upon leaving, after the closing of contactors, the car does not move out from the stop zone within 10 seconds. The description of the alarm reports the floor number in which the alarm triggered	

E06	RESET FAILURE	The car is unable to complete the reset operation.(arrival at the end floor and doors opening).	The system waits for a next call to try again the reset operation.
E07	CAR DOORS FAIL TO CLOSE	The doors do not complete the closing (SC4 = ON) within the time set in **F23.**	APB OPERATION The call is cancelled, the doors will reopen and the car is waiting for a new call. COLLECTIVE OPERATION The car and landing calls remain recorded and 5 attempts will be performed: if the problem persists, all calls are cancelled and the car remains in service, waiting for new calls. MULTIPLEX OPERATION The calls are not cancelled but are transferred to the other cars. If the timer intervenes in the CLOSING FOR PARKING or RESET procedure, 5 closing attempts will be performed, after which the car will park with the doors open.
E08	CAR DOORS FAIL TO OPEN	The doors do not complete the opening within the time set in **F22**.	Door motor control is disabled and the lift normally remains in service.
E09	HIGH SPEED MAXIMUM TRAVEL TIME TRIGGERED	The car is moving at high speed without reaching the next floor within the time set in **F24**.	**Out of Service** Manual Alarm Reset required
E10	LOW SPEED MAXIMUM TRAVEL TIME TRIGGERED	The car moves at low speed without reaching the floor within the time set in **F25**.	**Out of Service** Manual Alarm Reset required
E11	RELEVELING MAXIMUM TRAVEL TIME TRIGGERED	The car is in releveling phase without reaching the floor within the time set in **F50**.	**Out of Service** Manual Alarm Reset required
E12	MAIN CONTACTORS DEACTIVATION FAILURE	The **RC** input (RUN contactors) do not turn off within 2 seconds from deactivation command (deactivation of outputs **AU** / **AD**).	Leaving is prevented until **RC** is active.
E13	FLOOR COUNT ERROR	Car position indicates an end floor but no limit switch is active.	A call is made to the opposite end floor to reset the car position.
E14	OVERTRAVEL	Opening of overtravel switch (input **SC2** - 1st section of safety chain)	**Out of Service** Manual Alarm Reset required
E15	MOTOR THERMISTORS PROTECTION TRIGGERED	Motor thermistors (connected to the input **TH1 - TH2**) have detected a rise in motor temperature up to the threshold of protection.	The car stops with the mode defined by **F33**, then the elevator is set to **Out of Service** Manual Alarm Reset required only if **F12** is set to **Manual**
E16	EXTERNAL ALARM 1	The contact connected to the input **EA1** is open (for example the alarm contact of the VVVF).	**Out of Service** Normal operation is automatically reset when the contact closes, performing the Reset operation.
E17	EXTERNAL ALARM 2	The contact connected to the input **EA2** is open (for example, the contact of the oil thermostat).	The lift stops at the end of the current travel and a subsequent leaving is prevented. Normal operation is automatically reset when the contact closes.
E18	NO OPERATING VOLTAGE	There is no voltage at the input **SC1** (upstream of the safety chain)	The lift stops and a subsequent leaving is prevented. The lift returns the service automatically when the voltage is restored.
E20	MAXIMUM TIME PHOTOCELL OR SAFETY EDGE INTERRUPTED	Contact connected to the input **IP1** is open for a time greater than 20 sec.	Leaving is prevented as long as such condition is active. Normal operation is automatically restored when the contact closes.
E21	RETURN TO BOTTOM FLOOR FAILED IN HYDRAULIC	If the car couldn't move to reach the bottom floor	**Out of Service** Manual Alarm Reset required

E22	DOOR THERMISTOR	The thermistors connected to **TH3-TH4** on **ELECB** board have detected a very high temperature of the door motor. Alarm active only if function **F59** EN81-20 is set to “YES”	The car stops in the mode defined by the function **F33** and the lift is put **out of service** state. Manual alarm reset is required only if the function **F12** is set to 'manual'.
E23	DOOR CONTACTS	The control of the door contacts has failed. Alarm active only if function **F59** EN81-20 is set to “YES”	**ELEMID** tries to open the door for a second time. If the test fails again, the car will not move from the floor.
E24	PIT ACCESS	Pit access has occurred. AIF state is shown on the display. Alarm active only if function **F59** EN81-20 is set to “YES”	In this condition, only pit inspection operation is permitted. For returning to normal service it is necessary to reset the alarm as described in paragraph **1.5**.
E25	MICRO OPENING 1	The brake micro switch 1 does not open with the system move. Alarm active only if function **F60** UCM Verify is set to “YES”	The lift is put **out of service** state at the end of the ride and the manual reset of the alarm is required
E26	MICRO CLOSING 1	The brake micro switch 1 does not close with system stop. Alarm active only if function **F60** UCM Verify is set to “YES”	The lift is put **out of service** state at the end of the ride and the manual reset of the alarm is required
E27	MICRO OPENING 2	The brake micro switch 2 does not open with the system move. Alarm active only if function **F60** UCM Verify is set to “YES”	The lift is put **out of service** state at the end of the ride and the manual reset of the alarm is required
E29	MICRO CLOSING 2	The brake micro switch 2 does not close with system stop. Alarm active only if function **F60** UCM Verify is set to “YES”	The lift is put **out of service** state at the end of the ride and the manual reset of the alarm is required
E28	SAFETY CIRCUIT	Safety circuity does not work correctly. Alarm active only if function **F59** EN81-20 is set to “YES”	“The lift is put **out of service** state at the end of the ride and the manual reset of the alarm is required

► Out of service

In this condition the lift doesn't register any call and normally this state is not reversible in automatic.

If the lift is at door zone and the car has automatic doors, they are opened to make eventual people exit the car, then are closed again.

Eventual **OS** programmable output turns off in this condition.

The lift returns to normal operation after the alarm source is fixed and a **Manual Alarm Reset** is performed.

► Manual Alarm Reset

1. **Pressing 🡐 and 🡒 buttons** in Diagnostic menu (see **3.3.2 - Diagnostics**).
   In this case all the alarms are deleted from the Diagnostic menu.

2. Executing an Inspection operation (see **3.2.3 - Inspection Operation**).
   At the end of the operation the lift is not in a **Out of service** condition anymore, but alarms in Diagnostic are preserved.

8.3 - Functions

F	FUNCTION	ALLOWED VALUES	DESCRIPTION	DEFAULT
F01	TOP FLOOR	1 ÷ MAX FLOOR	Set this function to the maximum floor number, according to the operation mode and the number of expansion boards connected to the system.	7
F02	MAIN FLOOR	0 ÷ **F01**	Set the system main floor: any floor below the main floor has a negative number. This parameter affects calls management in Down Collective operation; landing calls above the main floor are down calls, up calls otherwise.	0
F03	OPERATION MODE	- APB: - DOWN COLLECTIVE: - FULL COLLECTIVE: - HOME LIFT: - A.P.B SX	Automatic Push-Button Operation. Collective Operation, one landing button per floor. Collective Operation, two landing buttons per floor. Operating mode for platforms. Special APB operation (collective for Car calls)	DOWN COLLECTIVE
F04	DRIVE TYPE	- 1 SPEED - 2 SPEEDS - VVVF_STD - VVVF TKK - HYDRAULIC	Sets the lift drive type. This setting effects the contactor activation sequence and the general lift behaviour.	VVVF_STD
F05	DOOR TYPE	- MANUAL: - SEMIAUTOMATIC: - AUTOMATIC:	manual car and landing doors automatic car doors and manual landing doors automatic car and landing doors	AUTOMATIC
F06	DOOR AT FLOOR	- OPEN DOORS - CLOSED DOORS - CLOSED AT F02	Set the behaviour of doors when the lift is at floor without registered calls. CLOSED AT F02 means: all doors normally open, except door at main floor F02, that is normally closed.	CLOSED DOORS
F07	CAR ENTRANCES	- 1 - 2	Set the number of car entrances. For two car entrances ELECB board and Serial Car Connection are mandatory.	1
F08	DOOR OPENING Floor: 0 1 ... **F01**	- SIDE 1: - SIDE 2: - SIMULTANEOUS: - SELECTIVE: - NONE:	Set the automatic doors behaviour for every floor (see **5.5.3 - Automatic Door Control**) open side 1 door only. open side 2 door only. open both side 1 and 2 doors simultaneously. see **6.2 - Selective Door Opening**. no doors opened (for manual doors).	SIDE 1
F09	INSPECTION SPEED	- LOW: - HIGH:	(See **3.2.3 - Inspection Operation**) Inspection speed is LS Inspection speed is HS; if **F04 = VVVF** Inspection speed is HS+LS	HIGH
F10	FORCE DOOR CLOSING	- NO: - YES: - CONSTANT: - DO+DC	Normal operation Closing active while the lift is moving Closing always active, except during opening Closing and opening always active (alternately)	NO
F11	LAND CALL DELETE MODE	- SELECTIVE: - SIMULTANEOUS:	Valid only for Full Collective operation. arriving at floor, the call in the same direction as the car is cancelled. arriving at floor, both up and down calls are cancelled.	SELECTIVE
F12	THERMISTOR RESET MODE	- MANUAL: - AUTOMATIC:	normal operation is prevented until manual reset. normal operation is restored automatically 10 minutes after thermistors returning to normal status.	MANUAL
F13	AUTOMATIC RETURN FOR TRACTION DRIVES	- NO: - YES: - BELOW TO **F14**:	disabled enabled enabled for floors below return floor	NO
F14	AUTOMATIC RETURN FLOOR FOR TRACTION DRIVES	0 ÷ **F01**	Return Floor for traction drives. Valid only if **F13 = YES**	0
F15	VIP CALL FLOOR	0 ÷ **F01**	After the activation of the **VIC** input the car reaches this floor. (See **3.2.8 - VIP Call Operation**)	1
F16	STOP DELAY TIME	0.0 ÷ 2.0 sec.	Delay between the detection of the stop zone and the main motor contactor drop. Use this delay to achieve perfect stop position.	0.0 sec.
F17	CONTACTOR OPEN DELAY	0.0 ÷ 2.0 sec.	Valid only for VVVF drive. If RC input does not work; at stop, sets the delay between the deactivation of speed and direction commands.	2.0 sec.

F	FUNCTION	ALLOWED VALUES	DESCRIPTION	DEFAULT
F18	EMERGENCY STOP DELAY	0.0 ÷ 2.0 sec.	Works as **F16** but in Emergency operation.	0.0 sec.
F19	CAM FALL DELAY	0.0 ÷ 2.0 sec.	Delay between the opening of the contactors at stop and the opening of the retiring cam relay (CAM).	0.3 sec.
F20	DOOR OPENING DELAY	0.0 ÷ 2.0 sec.	Delay between the opening of the contactors at stop and command for door opening. Use in lifts with automatic doors and retiring cam to ensure that the doors opening starts when the cam has already dropped.	0.5 sec.
F21	EMERGENCY MAXIMUM TIME	1 ÷ 15 min.	If Emergency operation does not finish within this time, it will be interrupted; to restore the operation disable the **ROP** input.	15 min.
F22	DOOR OPENING TIME	1 ÷ 60 sec.	Protection of the door motor for opening; set to a time higher than the time normally required to fully open the doors, at least 1 second higher.	10 sec.
F23	DOOR CLOSING TIME	1 ÷ 60 sec.	Protection of the door motor for closing; set to a time higher than the time normally required to fully close the doors, at least 2-3 second higher.	10 sec.
F24	HIGH SPEED TIME	1 ÷ 45 sec.	During the run in high speed the time between floors is measured continuously by the board. If this time exceed the High Speed Time, alarm **E09** is triggered.	45 sec.
F25	LOW SPEED TIME	1 ÷ 45 sec.	During the run, the time the system is in low speed is always measured. If this time exceed the low speed time, alarm **E10** is triggered.	45 sec.
F26	START DELAY TIME	1 ÷ 60 sec.	Valid only for Collective operations. Defines the stop time of the car at floor with the doors open before leaving for another call.	2 sec.
F27	OCCUPIED TIME	1 ÷ 60 sec.	In the APB operation this sets the delay for Occupied signal to turn off at floor, and also disabling landing calls. In Collective operation, defines the stop time before reversing direction to serve calls in the opposite direction. It must be greater than the time set in **F26**.	5 sec.
F28	AUTOMATIC RETURN DELAY	1 ÷ 15 min.	Valid for both traction and hydraulic lifts.	15 min.
F29	GONG TIME	0.1 ÷ 3.0 sec.	It is the time in which the acoustic signal of car coming at floor is active, at the beginning of door opening or after the stop in the case of manual doors.	0.5 sec.
F30	CAR LIGHT TIME	1 ÷ 255 time units	Controls the Car Light output and sets how long this output stays active after the Occupied turns off. Time unit is set by **F48**, seconds by default.	10 sec.
F31	SELECTOR TYPE	0-Magnetic switches	Defines the type of floor counter.-	0
F32	MAGNETIC SWITCH TYPE	- NORMALLY OPEN - NORMALLY CLOSED	Defines USS and DSS switch type. For NC contacts, at floor level, USS and DSS ELEMID inputs are OFF. ULS and DLS limit switches are always NORM. CLOSED.	NORMALLY OPEN
F33	THERMISTOR STOP MODE	- END RUN - STOP AT ONCE	Defines the stop mode of the car following a Thermistor Alarm	END RUN
F34	RELEVELING STOP DELAY	0.0 ÷ 2.0 sec.	Works as **F16** but in Releveling operation.	0.2 sec.
F35	NEXT START DIRECTION MODE	- OFF during RUN: - ON during RUN:	Valid only for Collective operations. next direction signals are active from stop at floor until the next leaving. next direction signals are on also during the run, indicating the car direction	OFF during RUN
F36	EMERGENCY FLOOR	- NEXT FLOOR: - BOTTOM FLOOR:	(See **3.2.7 - Emergency Operation**) Operation ends when car reaches USS and DSS Operation ends when car reaches USS, DSS and DLS.	NEXT FLOOR
F37	CONTACTOR CONTROL INPUT TYPE	- ACTIVE HIGH: - ACTIVE LOW:	Choose the control logic of the contactor control according to the availability of auxiliary contacts. H.connection to RC: parallel of main contact. NO contacts. L.connection to RC: series of main contactors NC contacts.	ACTIVE LOW

F	FUNCTION	ALLOWED VALUES	DESCRIPTION	DEFAULT
F38	CONTACTOR CONTROL MODE	- UP & DOWN: - UP ONLY:	control is always done, both in up and down run. control is made only during up run: required for the hydraulic systems where there is no relay/contactor for down run, as the down valve is controlled downstream of the safety chain.	UP & DOWN
F39	LIFT GROUP	- 1 Lift - 2 Lifts - 3 Lifts - 4 Lifts	Only valid in MULTIPLEX operation (see **6.1 - Multiplex Operation**). Set the number of the lift systems connected.	1 Lift
F40	LIFT NUMBER	0 ÷ 3	Only valid in MULTIPLEX operation (see **6.1 - Multiplex Operation**). Identifies the car within a group: 0 = Lift 1, 1 = Lift 2, 2 = Lift 3, 3 = Lift 4	0
F41	ZONE TIME OUT	1 ÷ 255 sec.	Only valid in MULTIPLEX operation (see **6.1 - Multiplex Operation**). Indicates the maximum time one or more calls can wait to be assigned to a car; after this time, this calls priority increases.	44 sec..
F42	ADVANCED DOOR OPENING	- NOT ACTIVE: - ON SLOWDOWN: - AT FLOOR:	advanced opening not enabled. opening is commanded at slowdown. An external safety circuit must provide the bypass of the door safety switches in the allowed door zone and enable the opening command at the suitable time the opening is commanded at when the car reaches the door zone. An external safety circuit must provide the bypass of door safety switches in the allowed door zone.	NOT ACTIVE
F43	MISSING FLOOR	- NONE - BOTTOM FLOOR - TOP FLOOR - OTHER CAR BOTTOM - OTHER CAR TOP	Only valid in MULTIPLEX operation (see **6.1 - Multiplex Operation**). In the particular case in which one car cannot reach an end floor, served instead by the other car.	NONE
F44	FIRE-FIGHTER OPERATION MODE	- NONE - EN81-72 - EN81-73	See **3.2.9 - Fire-Fighter Operation EN81-72 / EN81-73**	NONE
F45	FIRE-FIGHTER FLOOR 1	0 ÷ **F01**	See **3.2.9 - Fire-Fighter Operation EN81-72 / EN81-73** and the paragraph below	0
F46	FIRE-FIGHTER FLOOR 2	0 ÷ **F01**	See **3.2.9 - Fire-Fighter Operation EN81-72 / EN81-73** and the paragraph below	0
F47	DOOR CLOSE IN PHASE 1	- NO - YES	See **3.2.9 - Fire-Fighter Operation EN81-72 / EN81-73**	NO
F48	CAR LIGHT UNIT	- SECONDS - MINUTES	Sets the unit of measurement for **F30**. Sets to minutes for longer car light time.	SECONDS
F49	STAND-BY TIME	0 ÷ 255 min.	After this time, the system goes in stand-by mode. See **5.5.6 - Stand by for energy saving**	0 min.
F50	RELEVELING TIME	0 ÷ 255 sec.	If releveling operation time exceed this limit, an alarm **E11** is triggered.	10 sec.
F51	EXTENSION	- NO: - CALLS ONLY: - CAR & CALLS: - SERIAL SHAFT	See **4 - Board Configurations**. Parallel Car Connection, ELEMID Standalone Parallel Car Connection, ELEMID + ELEXP Serial Car Connection, ELEMID + ELECB (+ ELEXP if needed) Serial Shaft Connection, ELEMID+ELECB+NOBASE	NO
F52	DOOR CLOSE RETENTION DELAY	0.0 ÷ 3.0 sec.	It's the time car door closing command holds ON, after the safety chain car door input SC4 is closed, in order to allow the complete mechanical closing. For manual doors it's the delay before to drive the retiring CAM once SC$ is closed	1.0 sec.
F53	REMOTE DISPLAY	- NO: - 7 SEG: - 7 SEG x 2: - 1 OUT * FLOOR:	no ELEXP boards used as display driver one ELEXP works as 7 segments display driver two ELEXP work as 7 segments display driver one or more ELEXP work as 1 output per floor	NO
F54	MAIN FLOOR DISPLAY	- 0: - 1: - A,B,C...:	Main floor is 0, the floors below are negative Main floor is 1 and the floors below are negative (0 doesn't exist) Main floor is a letter, the floors below are negative	0

F	FUNCTION	ALLOWED VALUES	DESCRIPTION	DEFAULT
F55	DISPLAY DECODING	- BINARY - GRAY - SINGLE POLE - BINARY +1 - 7 SEGMENTS	Set the decoding for display outputs on ELEMID and ELECB boards.	BINARY
F56	STAR DELTA TIMER	0.0 ÷ 3.0 sec.	Set time for Star-delta hydraulic drives. See **5.5.5 - Star-delta start for Hydraulic drives**.	0.0 sec.
F57	SOFT STOP TIMER	0.0 ÷ 5.0 sec.	Set time for Soft stop function for hydraulic drives. If not used set to 0. See **5.5.7 - Soft stop for Hydraulic drives**.	0.0 sec.
F58	SHORT FLOOR	'- NO '- YES	Short floor function. See **5.5.8 - Short Floor Features (only terminal floors)**.	NO
F59	EN81-20	'- NO '- YES	Enable EN81-20 functions See document "ELEMID EN81-20"	NO
F60	UCM Verify	'- NO '- YES	UCM Function brake switches monitoring, not certified See document "ELEMID UCM"	NO
F61	Stop DLS-ULS	'- NO '- YES	When in inspection, CAR stops on DLS or ULS limit switches	NO
F62	Total Shafts	0 ÷ 2	Number of shafts in case of Serial shaft (F51=SERIAL SHAFT)	0
F63	Slowing delay	0,0÷0,5 sec.	Sets the delay in the transition from high to low speed	0.0
F64	Max. Restarts	0-5	Sets the maximum missing starts of the car. If this value is different from 0, the board goes in fault **E05** when the number of missing starts reaches the settled value.	0

8.4 - Electrical Specification

WARNING!	**DO NOT use any power source with voltage different from specifications**
	DO NOT connect terminal 0V to GROUND
	SCC terminal (M10 connector) MUST BE CONNECTED TO GROUND

8.4.1 - General Specifications

SPECIFICATION		ELEMID	ELECB	ELEXP
Power Input	Voltage	18Vac or 24Vdc ± 10% Protected by resettable fuse		24Vdc ± 10%
	Terminals	18~, 18~ (M11)	18~, 18~ (M12)	24X, 0V (M12)
Power Output	Voltage	24Vdc from internal rectifier		-
	Terminals	24E, 0V (M11)	24X, 0V (M12)	-
Generic Input	Voltage	24Vdc		
	Number	38 (M2, M3, M4, M5, M6)	28 (M2, M3, M4)	12 (M2)
Thermistor Input	Terminals	TH1/TH2 (M5)	TH3/TH4 (M5)	-
Safety chain Input	Voltage	24V-60 Vdc, 24-110Vac	-	-
	Terminals	SCC SC1-SC5 (M9)		

Transistor Output	Number	22 Registered / Incoming signal, Generic Output	12 Registered / Incoming signal, Generic Output	-
	Terminals	U00-U7/D00-D7 (M2 and M3), Outputs (M6)	C00-C11 (M2), Outputs (M6)	
	Voltage	24Vdc		-
	Maximum Current	250mA, short circuit protected		
	Max Current per group (12)	1A		
Relay Output Type 1	Number	1 Occupied signal or Car Light	2 Car Light, CAM control	-
	Terminals	OC1/OC2/OCX (M9)	OA1/OA2 (M8), OB1/OB2 (M9)	
	Rating	Max. Power (2000VA) Rated Load (8A 250Vac / 8A 24Vdc)		
Relay Output Type 2	Number	2 Door controls	9 Door controls Side 1, Door controls Side 2, Car position display signal	12 Registered / Incoming signal or Display driver dry contact outputs
	Terminals	CD DO/DC (M9),	CD1 DO1/DC1 (M11), CD2 DO2/DC2 (M10), CCD CB0-CB4 (M7)	CC C00-C11
	Rating	Max. Power (62,5VA/30W) Rated Load (0,5A 125Vac / 1A 30Vdc)		
CAN BUS	Terminals	CAL/CAH/SH (M1 and M1A)	CAL/CAH/SH (M1)	CAL/CAH/SH (M1 and M2)
USB Port	Connector	CN1	-	-

8.4.2 - Power Supply considerations

Power ELEMID board directly from the **18~ 18~** terminals, even for DC power supply.

Use terminals **24E** or **24X** only as an output to power external control panel logic.

As AC power source is recommended to use a dedicated secondary winding from an insulated transformer, independent from other AC voltages as, for example, safety chain operation voltage, and not referred to ground. For Serial Car connection, power ELECB board from **0V** - **24V** of ELEMID board.

8.4.3 - ELEMID, ELECB I/O

Each Generic Input, Safety Chain Input and Thermistor Input status is indicated by a **green LED**.

Transistor output logic for VVVF drive is shown in **Figure 12**.

If it is necessary to decouple an output of the board with a relay, the load must be connected between the corresponding terminal and the 24V, as indicated in the example in **Figure 13** for the PB0 signal.

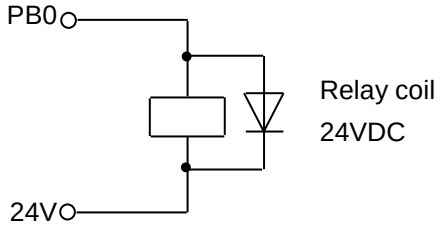

Figure 13

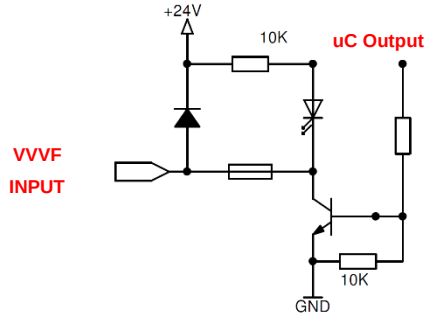

Figure 12

As a general rule, it is recommended to **always connect a protection device** in parallel to **relays coils**, **contactors coils**, electromagnets, or other similar magnetic devices, to protect the board against surges:

- **Diodes** for DC voltage loads
- **Varistors** or **RC Filters** for AC voltage loads, or when it is important to quickly de-energize the equipment.

For contactors, a good advice is to use the devices recommended by manufacturer.

8.4.4 - ELEXP I/O

ELEXP Board Outputs are all relay based **Normally Open dry contact**.

To use this board as a call expansion, **connect 24X** to relay common **CC**, as shown in **Figure 1**; also in this case make sure that all **SW1 switches are set to ON**.

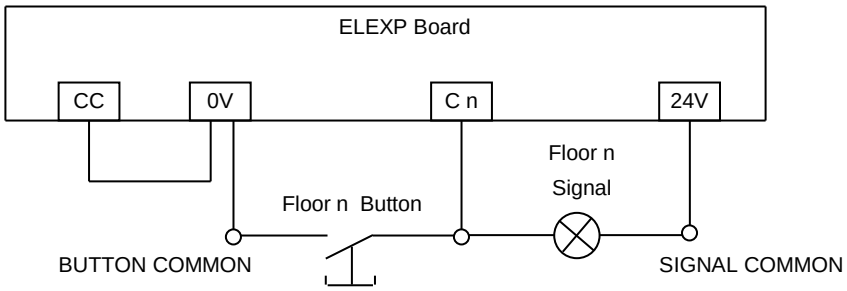

Figure 14

8.4.5 - LED Indicators

On ELEXP and ELECB board two indication led can be used for diagnostic purpose:

RED LED	Blinking	The microprocessor is working
GREEN LED	Blinking	CAN communication OK
	Off	CAN communication ERROR

On ELEMID board, there are also two indication led:

RED LED	Blinking	The microprocessor is working
GREEN LED	Blinking	CAN communication OK
	On	CAN communication ERROR
	Off	CAN disabled by parameters **F39 F51** or **F54**

8.5 - Boards Layout

8.5.1 - ELEMID

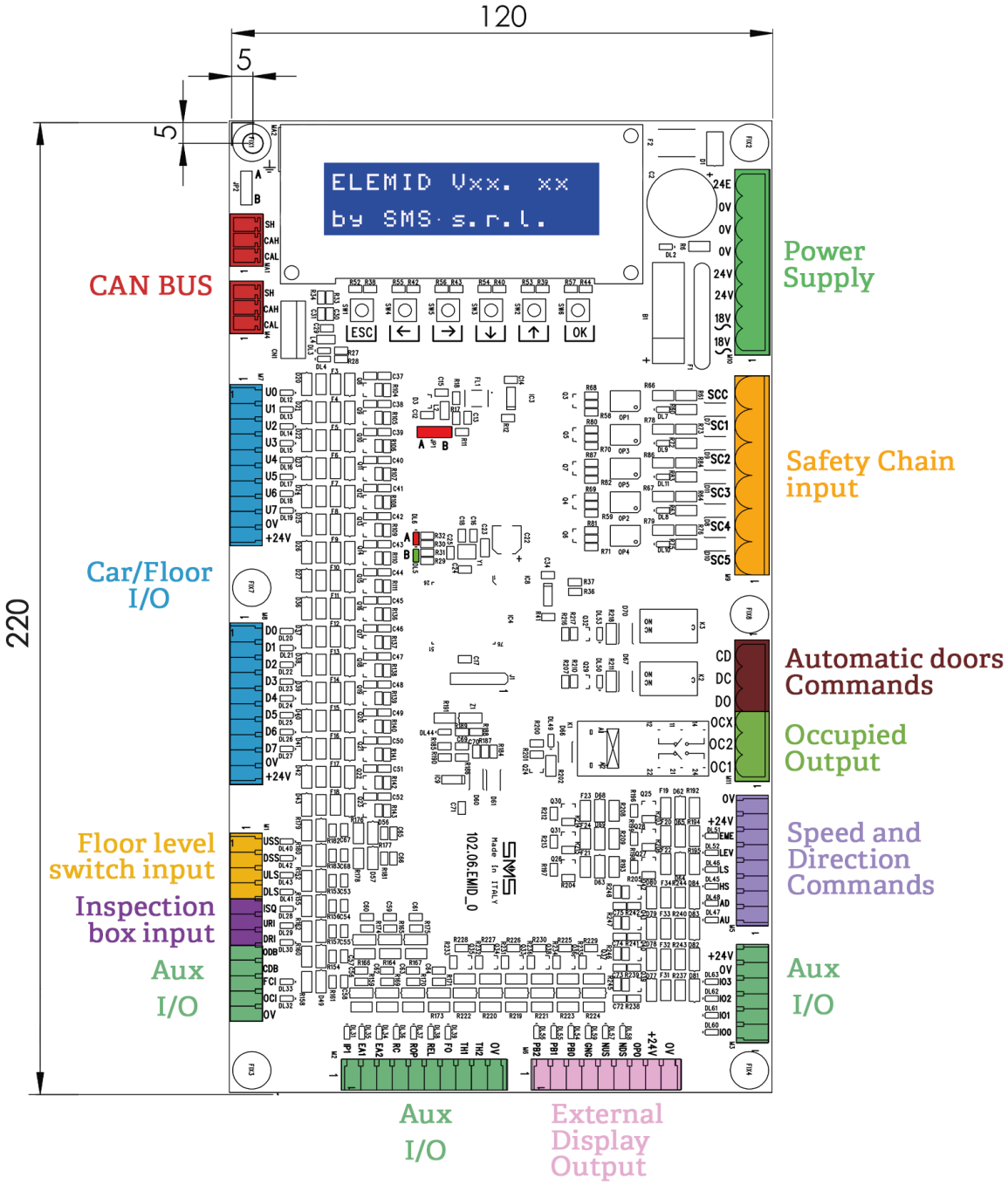

Dimensions: 120 x 220 x 32 mm

8.5.2 - ELECB

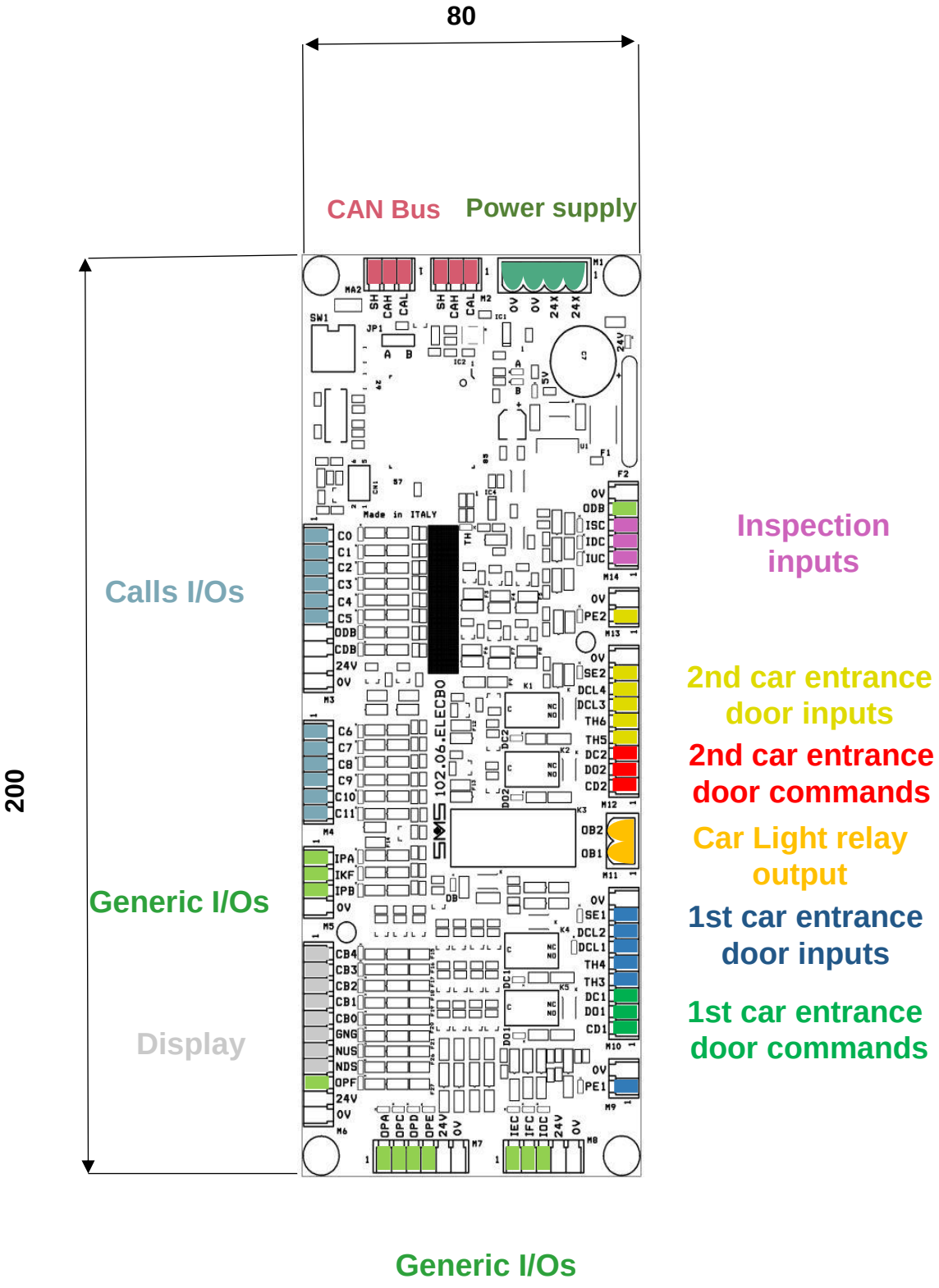

Dimensions: 80 x 200 x 32 mm

8.5.3 - ELEXP

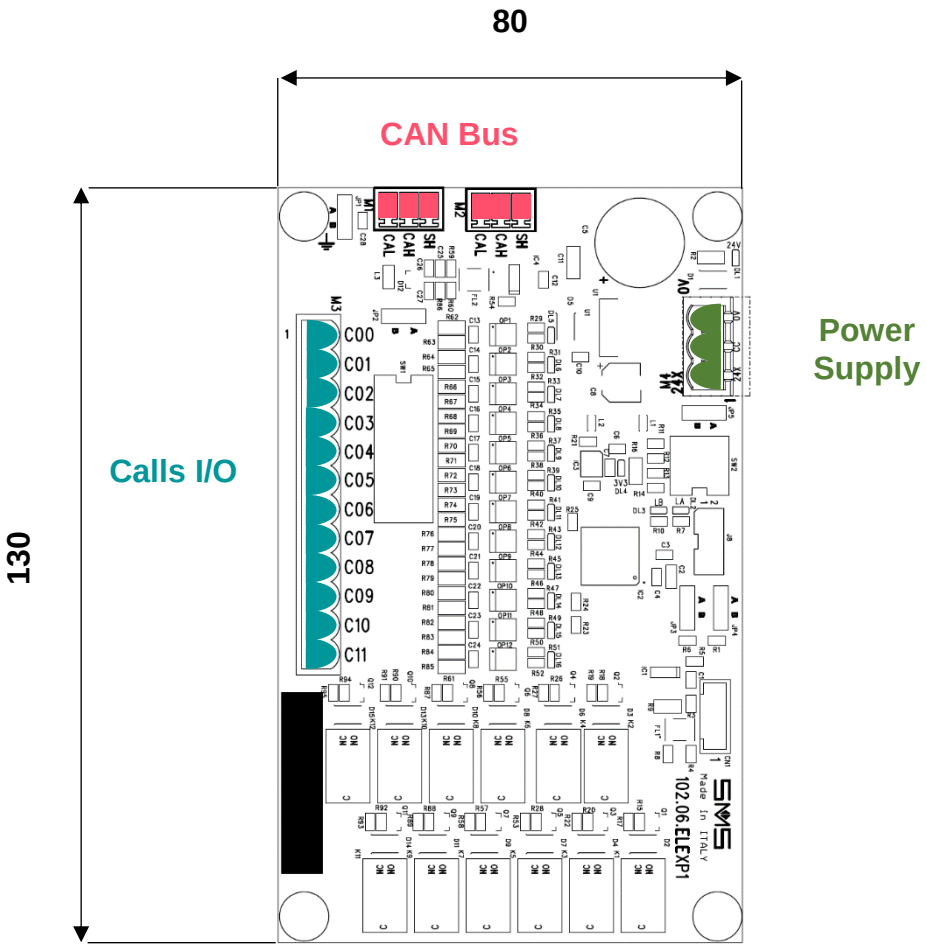

Dimensions: 80 x 130 x 32 mm

8.6 - CAN Bus

8.6.1 - Bus connection

ELEMID is a CAN Bus based system, and this communication bus requires that every device **CAL** and **CAH** terminal is connected in parallel.

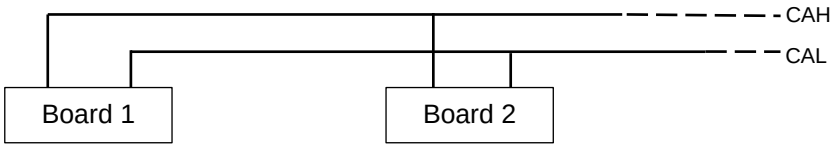

Figure 14

CAN Bus impedance should be around 60Ω, so every board has a Jumper that enables 120Ω in parallel, so only two jumper can be enabled in the system.
The boards have two CAN connectors (their terminals are in parallel to each other) to wire the boards of the system as a chain; enable resistance jumper always in the first and last board of the chain (the ones with one connector empty).
For Serial Car connection enable ELEMID (**JP1** on **B**) and ELECB resistance (**JP1** on **B**), for Parallel Car connection enable ELEMID and the last ELEXP of the chain (**JP2** on **B**).
To ensure the best functionality, use of twisted pair cable is recommended, use of twisted pair shielded cable for CAN connection is better, especially if VVVF drives are present ; connect cable shield to **SH** terminals.

8.6.2 - Board Address

In CAN BUS systems every board has an unique address.

You can set a board address through some hardware switches:

- For ELEXP **SW2** Dipswitch, **JP3** and **JP4** Jumpers
- For ELECB **SW1** Dipswitch

► ELEXP

In ELEXP boards the address is set according to this table:

SW2:2	SW2:1	JP3	Address
OFF	OFF	A	0
OFF	ON	A	1
ON	OFF	A	2
ON	ON	A	3
OFF	OFF	B	4
OFF	ON	B	5
ON	OFF	B	6
ON	ON	B	7

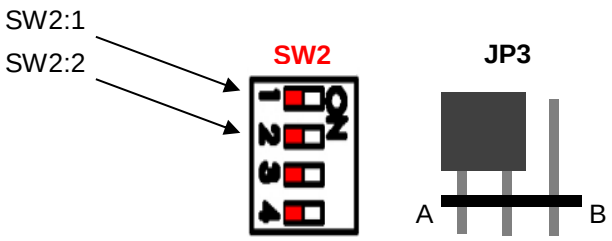

JP4 jumper defines ELEXP Board function.

JP4	Function
A	Normal call expansion
B	Display Driver (see **6.3 - ELEXP As Display Driver**)

► ELECB

In ELECB Board **SW1** dipswitch behaves as **SW2** in ELEXP board; there is no **JP3** though, so only address numbers from 0 to 3 are available for this board.

► **Multiplex Operation**

In multiplex operation set every board dipswitch according to the lift group that it is assigned.

For ELEMID the lift group is set by **F40** function (see **6.1 - Multiplex Operation**).

For ELEXP is set by the last two switches of **SW2**, for ELECB is set by the last two switches of **SW1**.

SW2:4	SW2:3	Lift Group
OFF	OFF	0
ON	OFF	1
OFF	ON	2
ON	ON	3

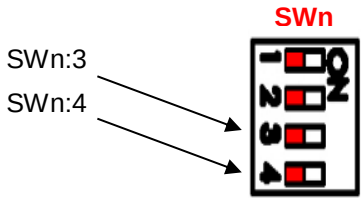

Set lift group to 0 (OFF, OFF) if multiplex operation is not active.

8.6.3 - Troubleshooting

CAN Bus impedance can be measured with a multimeter from CAL terminal to CAH terminal, with control panel disconnected from the power. Activate board jumpers until is ~ 60Ω as described in **8.6.1 - Bus connection**.

In Serial Car connection configuration, if shielded cable is not available, is important that CAN signals travel as far as possible from power signals in the travelling cable, especially if any VVVF are present.

If the CAN communication is correct, in automatic operation on every connected board a green led should flash continuously.

If in any ELEXP or ELECB board the green led does not flash, check if all the board address are correct according to the configuration used (see **4 - Board Configurations** and **8.6.2 - Board Address**).

SMS S.R.L. (Gruppo SASSI HOLDING)

E-mail: sms@sms.bo.it • **Website:** www.sms-lift.com • **Tel:** +39 051 969037 • **Address:** Via Guido Rossa 46-48-50 Loc. Crespellano 40053 Valsamoggia - Bologna - Italy

E-mail Technical Assistance: assistenzatecnica@sms.bo.it • **Tel. Technical Assistance:** +39 051 6720710